DYNAMIC ENGINEERING CONSULTANT CO., LTD.		Job No.	193018
Design Reinforced Concrete Beam		Rev.	1
(Ultimate Stress Design method in accordance with ACI 318-89)		Initial	CKJ
Beam No.	MB-6	Date	13-Aug-20
Project :	อาคารทิศตะวันออก	File	Beam MB

	fc'	=	350	[kg/cm^2]
	fy SD	=	4000	[kg/cm^2]
	fy SR	=	2400	[kg/cm^2]
$M_{-pos.}$	Mu^+	=	25675	[kg-m]
$M_{-neg.}$	Mu^-	=	25675	[kg-m]
$V_{max.}$	Vu	=	19675	[kg]
	DL	=	2590	[kg/m]
	LL	=	4080	[kg/m]
Length	Ln	=	500	[cm]
width	b	=	25	[cm]
depth	t	=	90	[cm]
	d'	=	3.5	[cm]
siding	d''	=	5	[cm]

For Positive Moment :

Upper Steel	DB 20
Lower Steel	DB 20
Stirrup Steel	RB 9

d	=	86.5	[cm]
a try	=	4.5540	[cm]
As	=	8.468	[cm^2]
a	=	**4.5542**	[cm]
ϕ Bend	=	0.90	
ϕ Shea	=	0.85	
k1	=	0.80	
Es	=	2040000	[kg/cm^2]
Ec	=	284553	[kg/cm^2]
n	=	7	
ρ	=	0.0360	
ρ_{max}	=	0.0270	
As	=	58.347	[cm^2]
a	=	31.380	[cm]
Mu	=	148737	[kg-m]
M1	=	0	[kg-m]
As'	=	0.0000	[cm^2]
No. of steel	=	**2**	
As	=	6.28	[cm^2]
Σ As	=	8.468	[cm^2]
No. of steel	=	**3**	
As	=	9.42	[cm^2]

Section OK

Stirrup Design

$0.53\,\phi\,(fc')^{0.5}\,bd$	=	19298	[kg]
L=Ln/2(Vu - ϕ Vc)/Vu	=	41.6	[cm]
S	=	43.250	[cm]
Used Stirrup		**RB 9 @ 0.400**	**OK**

For Negative Moment :

Upper Steel	DB 20
Lower Steel	DB 20
Stirrup Steel	RB 9

d	=	86.5	[cm]
a try	=	8.7110	[cm]
As	=	8.468	[cm^2]
a	=	**4.5542**	[cm]
ϕ Bend	=	0.90	
ϕ Shea	=	0.85	
k1	=	1.05	
Es	=	2040000	[kg/cm^2]
Ec	=	284553	[kg/cm^2]
n	=	7	
ρ	=	0.0472	
ρ_{max}	=	0.0354	
As	=	76.581	[cm^2]
a	=	41.186	[cm]
Mu	=	181699	[kg-m]
M1	=	0	[kg-m]
As'	=	0.0000	[cm^2]
No. of steel	=	**2**	
As	=	6.28	[cm^2]
Σ As	=	8.468	[cm^2]
No. of steel	=	**3**	
As	=	9.42	[cm^2]

Section OK

Check Deflection

Δ all	=	1.39	[cm]		
ρ fy	=	17	<	35	[kg/cm^2]
Y'	=	18.9			
I	=	1348364	[cm^4]		
Ec	=	284116	[kg/cm^2]		
Δ	=	0.14	[cm] <	Δ all	OK
Δ Time	=	0.04	<	Δ all	OK

KINGDOM OF THAILAND
CHOKCHAI KHATKHAJORN
โชคชัย ขัดขจร
สย. 4522
REGISTERED PROFESSIONAL ENGINEER

DYNAMIC ENGINEERING CONSULTANT CO., LTD.		Job No.	193018
Design Reinforced Concrete Beam		Rev.	1
(Ultimate Stress Design method in accordance with ACI 318-89)		Initial	CKJ
Beam No.	MB-6	Date	13-Aug-20
Project :	อาคารทิศตะวันออก	File	Beam MB

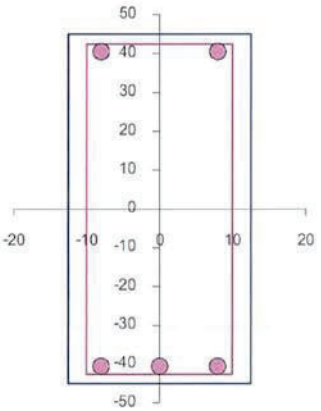

2 DB 20

Stirrup RB 9
@ 0.400

3 DB 20

Positive Section

MB-6 (25 X 90)

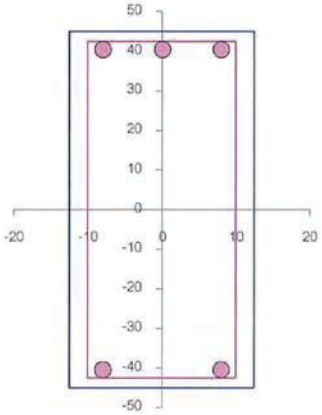

3 DB 20

Stirrup RB 9
@ 0.400

2 DB 20

Negative Section

MB-6 (25 X 90)

KINGDOM OF THAILAND
CHOKCHAI KHATKHAJORN
โชคชัย ขัดขจร
สย. 4522
REGISTERED PROFESSIONAL ENGINEER

DYNAMIC ENGINEERING CONSULTANT CO., LTD.

Design Reinforced Concrete Beam
(Ultimate Stress Design method in accordance with ACI 318-89)

Job No.	193018	Beam No.	RPB-1
Rev.	1	Project :	อาคารทิศตะวันออก
Initial	CKJ		
Date	13-Aug-20		
File	Beam MB		

	fc'	=	350	[kg/cm²]
	fy SD	=	4000	[kg/cm²]
	fy SR	=	2400	[kg/cm²]
$M_{-pos.}$	Mu^+	=	8480	[kg-m]
$M_{-neg.}$	Mu^-	=	8480	[kg-m]
$V_{max.}$	Vu	=	8480	[kg]
	DL	=	840	[kg/m]
	LL	=	3400	[kg/m]
Length	Ln	=	400	[cm]
width	b	=	20	[cm]
depth	t	=	50	[cm]
	d'	=	3.5	[cm]
siding	d''	=	5	[cm]

For Positive Moment :

Upper Steel: DB 20
Lower Steel: DB 20
Stirrup Steel: RB 9

d	=	46.5	[cm]
a try	=	3.5401	[cm]
As	=	5.266	[cm²]
a	=	**3.5403**	[cm]
ϕ Bend	=	0.90	
ϕ Shea	=	0.85	
k1	=	0.80	
Es	=	2040000	[kg/cm²]
Ec	=	284553	[kg/cm²]
n	=	7	
ρ	=	0.0360	
ρ_{max}	=	0.0270	
As	=	25.093	[cm²]
a	=	16.869	[cm]
Mu	=	34386	[kg-m]
M1	=	0	[kg-m]
As'	=	0.0000	[cm²]
No. of steel	=	**2**	
As	=	6.28	[cm²]
Σ As	=	5.266	[cm²]
No. of steel	=	**2**	
As	=	6.28	[cm²]

Section OK

For Negative Moment :

Upper Steel: DB 20
Lower Steel: DB 20
Stirrup Steel: RB 9

d	=	46.5	[cm]
a try	=	8.7110	[cm]
As	=	5.266	[cm²]
a	=	**3.5403**	[cm]
ϕ Bend	=	0.90	
ϕ Shea	=	0.85	
k1	=	1.05	
Es	=	2040000	[kg/cm²]
Ec	=	284553	[kg/cm²]
n	=	7	
ρ	=	0.0472	
ρ_{max}	=	0.0354	
As	=	32.934	[cm²]
a	=	22.141	[cm]
Mu	=	42007	[kg-m]
M1	=	0	[kg-m]
As'	=	0.0000	[cm²]
No. of steel	=	**2**	
As	=	6.28	[cm²]
Σ As	=	5.266	[cm²]
No. of steel	=	**2**	
As	=	6.28	[cm²]

Section OK

Stirrup Design

$0.53\ \phi\ (fc')^{0.5}\ bd$	=	8299	[kg]
L=Ln/2(Vu - ϕ Vc)/Vu	=	33.6	[cm]
S	=	23.250	[cm]
Used Stirrup		**RB 9 @ 0.225**	**OK**

Check Deflection

Δ all	=	1.11 [cm]		
ρ fy	=	27	<	35 [kg/cm²]
Y'	=	12.3		
I	=	167574 [cm⁴]		
Ec	=	284116 [kg/cm²]		
Δ	=	0.30 [cm]	<	Δ all **OK**
Δ Time	=	0.12	<	Δ all **OK**

KINGDOM OF THAILAND
CHOKCHAI KHATKHAJORN
โชคชัย ขัดขจร
สย. 4522
REGISTERED PROFESSIONAL ENGINEER

DYNAMIC ENGINEERING CONSULTANT CO., LTD.		Job No.	193018
Design Reinforced Concrete Beam		Rev.	1
(Ultimate Stress Design method in accordance with ACI 318-89)		Initial	CKJ
Beam No.	RPB-1	Date	13-Aug-20
Project :	อาคารทิศตะวันออก	File	Beam MB

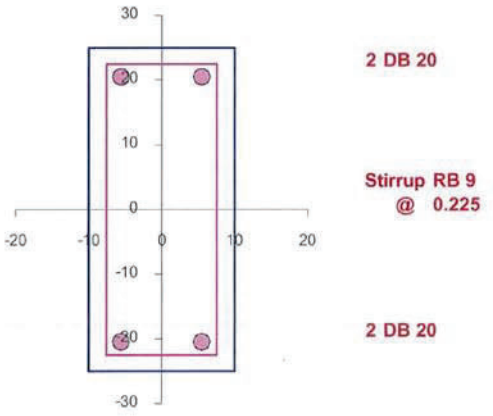

Positive Section

RPB-1 (20 X 50)

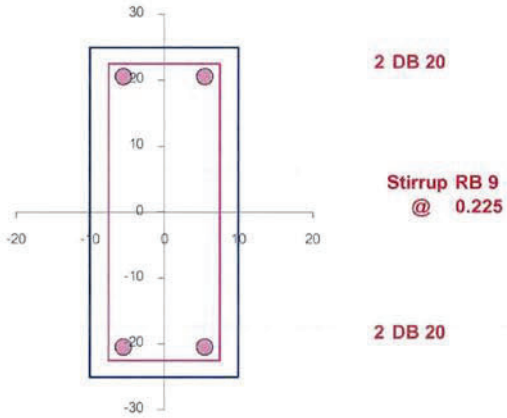

Negative Section

RPB-1 (20 X 50)

KINGDOM OF THAILAND
CHOKCHAI KHATKHAJORN
โชคชัย ขัดขจร
สย. 4522
REGISTERED PROFESSIONAL ENGINEER

DYNAMIC ENGINEERING CONSULTANT CO., LTD.

RC-I EXCEL — **Ultimate Stress Design method in accordance with ACI 318-89**

Design Reinforced Concrete Beam

Project	อาคารทิศตะวันออก โซน ซี	**Beam Code**	MB-B
Engineer	CKJ	**File Name**	Beam MB
		Date	24 Nov 20

	fc'	=	350	[kg/cm^2]
	fy SD	=	4000	[kg/cm^2]
	fy SD	=	2400	[kg/cm^2]
$M_{-pos.}$	Mu^+	=	25671	[kg-m]
$M_{-neg.}$	Mu^-	=	25670	[kg-m]
$V_{max.}$	Vu	=	15200	[kg]
	DL	=	1000	[kg/m]
	LL	=	3000	[kg/m]
Length	Ln	=	760	[cm]
width	b	=	40	[cm]
depth	t	=	60	[cm]
	d'	=	5	[cm]
siding	d"	=	3.5	[cm]

For Positive Moment :

Upper Steel	DB20
Lower Steel	DB20
Stirrup Steel	DB12

d	=	55	[cm]
a try	=	4.5459	[cm]
As	=	13.524	[cm^2]
a	=	**4.5459**	[cm]
ϕ Bend	=	0.90	
ϕ Shea	=	0.85	
k1	=	0.80	
Es	=	2040000	[kg/cm^2]
Ec	=	284553	[kg/cm^2]
n	=	7	
ρ	=	0.0360	
ρ_{max}	=	0.0270	
As	=	59.359	[cm^2]
a	=	19.953	[cm]
Mu	=	96212	[kg-m]
M1	=	0	[kg-m]
As'	=	0.0000	[cm^2]
No. of steel	=	**2**	
As	=	6.28	[cm^2]
Σ As	=	13.524	[cm^2]
No. of steel	=	**5**	
As	=	15.71	[cm^2]

Section OK

For Negative Moment :

Upper Steel	DB20
Lower Steel	DB20
Stirrup Steel	DB12

d	=	55	[cm]
a try	=	8.7110	[cm]
As	=	14.080	[cm^2]
a	=	**4.7326**	[cm]
ϕ Bend	=	0.90	
ϕ Shea	=	0.85	
k1	=	1.05	
Es	=	2040000	[kg/cm^2]
Ec	=	284553	[kg/cm^2]
n	=	7	
ρ	=	0.0472	
ρ_{max}	=	0.0354	
As	=	77.909	[cm^2]
a	=	26.188	[cm]
Mu	=	117535	[kg-m]
M1	=	0	[kg-m]
As'	=	0.0000	[cm^2]
No. of steel	=	**2**	
As	=	6.28	[cm^2]
Σ As	=	14.080	[cm^2]
No. of steel	=	**5**	
As	=	15.71	[cm^2]

Section OK

Stirrup Design

$0.53\ \phi\ (fc')^{0.5}\ bd$	=	19632	[kg]	
L=Ln/2(Vu - ϕ Vc)/Vu	=	-37.2	[cm]	
S	=	-57.257	[cm]	
Used Stirrup	1	DB12 @ #N/A		#N/A

Check Deflection

Δ all	=	2.11	[cm]		
ρ fy	=	29	<	35	[kg/cm^2]
Y'	=	14.9			
I	=	554583	[cm^4]		
Ec	=	284116	[kg/cm^2]		
Δ	=	1.10 [cm]	<	Δ all	OK
Δ Time	=	1.21	<	Δ all	OK

KINGDOM OF THAILAND
CHOKCHAI KHATKHAJORN
โชคชัย ขัดขจร
สย. 4522
REGISTERED PROFESSIONAL ENGINEER

DYNAMIC ENGINEERING CONSULTANT CO., LTD.

RC-I EXCEL		Ultimate Stress Design method in accordance with ACI 318-89	
Design Reinforced Concrete Beam		Beam Code	MB-B
Project	อาคารทิศตะวันออก โซน ซี	File Name	Beam MB
Engineer	CKJ	Date	24 Nov 20

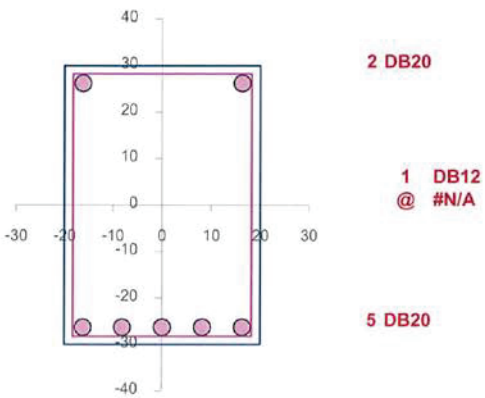

Positive Section
MB-B (40 X 60)

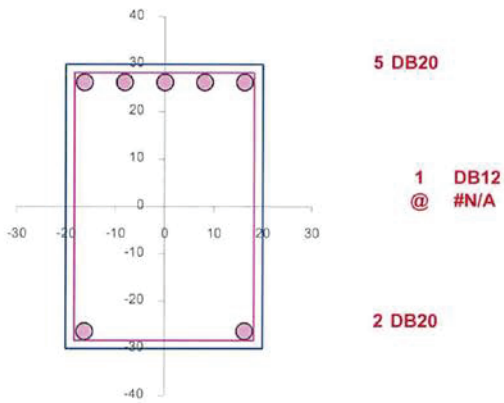

Negative Section
MB-B (40 X 60)

KINGDOM OF THAILAND
CHOKCHAI KHATKHAJORN
โชคชัย ขัดขจร
สย. 4522
REGISTERED PROFESSIONAL ENGINEER

DYNAMIC ENGINEERING CONSULTANT CO., LTD.		Job No.	193018
Design Reinforced Concrete Beam		Rev.	1
(Ultimate Stress Design method in accordance with ACI 318-89)		Initial	CKJ
Beam No.	DB-1	Date	13-Aug-20
Project :	อาคารทิศตะวันออก	File	Beam DB

	fc'	=	350	[kg/cm^2]
	fy SD	=	4000	[kg/cm^2]
	fy SR	=	2400	[kg/cm^2]
$M_{-pos.}$	Mu^+	=	187	[kg-m]
$M_{-neg.}$	Mu^-	=	0	[kg-m]
$V_{max.}$	Vu	=	750	[kg]
	DL	=	1160	[kg/m]
	LL	=	340	[kg/m]
Length	Ln	=	100	[cm]
width	b	=	15	[cm]
depth	t	=	30	[cm]
	d'	=	3.5	[cm]
siding	d"	=	3.5	[cm]

For Positive Moment :

Upper Steel	DB 12
Lower Steel	DB 12
Stirrup Steel	RB 9

d	=	26.5	[cm]
a try	=	0.1762	[cm]
As	=	0.197	[cm^2]
a	=	**0.1763**	[cm]
ϕ Bend	=	0.90	
ϕ Shea	=	0.85	
k1	=	0.80	
Es	=	2040000	[kg/cm^2]
Ec	=	284553	[kg/cm^2]
n	=	7	
ρ	=	0.0360	
ρ_{max}	=	0.0270	
As	=	10.725	[cm^2]
a	=	9.614	[cm]
Mu	=	8376	[kg-m]
M1	=	0	[kg-m]
As'	=	0.0000	[cm^2]
No. of steel	=	**2**	
As	=	2.26	[cm^2]
Σ As	=	0.197	[cm^2]
No. of steel	=	**2**	
As	=	2.26	[cm^2]

Section OK

Stirrup Design

$0.53\,\phi\,(fc')^{0.5}\,bd$	=	3547	[kg]
L=Ln/2(Vu - ϕ Vc)/Vu	=	-151.0	[cm]
S	=	-24.590	[cm]

Used Stirrup RB 9 @ #N/A #N/A

For Negative Moment :

Upper Steel	DB 12
Lower Steel	DB 12
Stirrup Steel	RB 9

d	=	26.5	[cm]
a try	=	8.7110	[cm]
As	=	0.000	[cm^2]
a	=	**0.1763**	[cm]
ϕ Bend	=	0.90	
ϕ Shea	=	0.85	
k1	=	1.05	
Es	=	2040000	[kg/cm^2]
Ec	=	284553	[kg/cm^2]
n	=	7	
ρ	=	0.0472	
ρ_{max}	=	0.0354	
As	=	14.077	[cm^2]
a	=	12.618	[cm]
Mu	=	10232	[kg-m]
M1	=	0	[kg-m]
As'	=	0.0000	[cm^2]
No. of steel	=	**2**	
As	=	2.26	[cm^2]
Σ As	=	0.000	[cm^2]
No. of steel	=	**2**	
As	=	2.26	[cm^2]

Section OK

Check Deflection

Δ all	=	0.28	[cm]		
ρ fy	=	23	<	35	[kg/cm^2]
Y'	=	6.5			
I	=	23262	[cm^4]		
Ec	=	284116	[kg/cm^2]		
Δ	=	0.00	[cm] <	Δ all	OK
Δ Time	=	0	<	Δ all	OK

KINGDOM OF THAILAND
CHOKCHAI KHATKHAJORN
โชคชัย ขัดขจร
สย. 4522
REGISTERED PROFESSIONAL ENGINEER

DYNAMIC ENGINEERING CONSULTANT CO., LTD.		Job No.	193018
Design Reinforced Concrete Beam		Rev.	1
(Ultimate Stress Design method in accordance with ACI 318-89)		Initial	CKJ
Beam No.	DB-1	Date	13-Aug-20
Project :	อาคารทิศตะวันออก	File	Beam DB

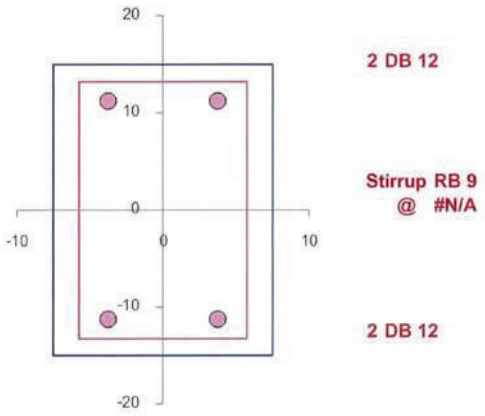

Positive Section

DB-1 (15 X 30)

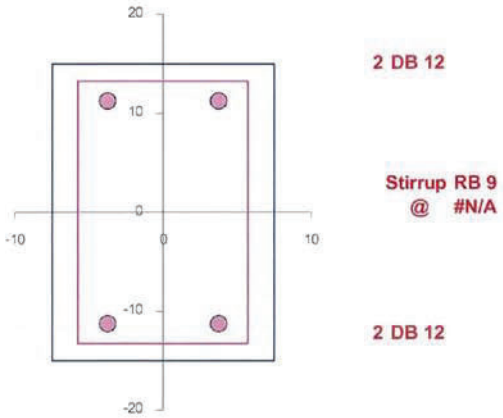

Negative Section

DB-1 (15 X 30)

KINGDOM OF THAILAND
CHOKCHAI KHATKHAJORN
โชคชัย ขัดขจร
สย. 4522
REGISTERED PROFESSIONAL ENGINEER

DYNAMIC ENGINEERING CONSULTANT CO., LTD.	Job No.	193018
Design Reinforced Concrete Beam	Rev.	1
(Ultimate Stress Design method in accordance with ACI 318-89)	Initial	CKJ
Beam No. DB-2	Date	13-Aug-20
Project : อาคารทิศตะวันออก	File	Beam DB

	fc'	=	350	[kg/cm^2]
	fy SD	=	4000	[kg/cm^2]
	fy SR	=	2400	[kg/cm^2]
$M_{+pos.}$	Mu^+	=	3786	[kg-m]
$M_{-neg.}$	Mu^-	=	0	[kg-m]
$V_{max.}$	Vu	=	4454	[kg]
	DL	=	1600	[kg/m]
	LL	=	1020	[kg/m]
Length	Ln	=	340	[cm]
width	b	=	20	[cm]
depth	t	=	40	[cm]
	d'	=	5	[cm]
siding	d"	=	3.5	[cm]

For Positive Moment :

Upper Steel	DB 16
Lower Steel	DB 16
Stirrup Steel	RB 9

	d	=	35 [cm]
	a try	=	2.0814 [cm]
	As	=	3.097 [cm^2]
	a	=	**2.0819** [cm]
	ϕ Bend	=	0.90
	ϕ Shea	=	0.85
	k1	=	0.80
	Es	=	2040000 [kg/cm^2]
	Ec	=	284553 [kg/cm^2]
	n	=	7
	ρ	=	0.0360
	ρ_{max}	=	0.0270
	As	=	18.887 [cm^2]
	a	=	12.697 [cm]
	Mu	=	19481 [kg-m]
	M1	=	0 [kg-m]
	As'	=	0.0000 [cm^2]
	No. of steel	=	**2**
	As	=	4.02 [cm^2]
	Σ As	=	3.097 [cm^2]
	No. of steel	=	**2**
	As	=	4.02 [cm^2]

Section OK

Stirrup Design

0.53 ϕ (fc')$^{0.5}$ bd	=	6247	[kg]
L=Ln/2(Vu - ϕ Vc)/Vu	=	-32.7	[cm]
S	=	-50.675	[cm]
Used Stirrup		RB 9 @ #N/A	#N/A

For Negative Moment :

Upper Steel	DB 16
Lower Steel	DB 16
Stirrup Steel	RB 9

	d	=	35 [cm]
	a try	=	8.7110 [cm]
	As	=	0.000 [cm^2]
	a	=	**2.0819** [cm]
	ϕ Bend	=	0.90
	ϕ Shea	=	0.85
	k1	=	1.05
	Es	=	2040000 [kg/cm^2]
	Ec	=	284553 [kg/cm^2]
	n	=	7
	ρ	=	0.0472
	ρ_{max}	=	0.0354
	As	=	24.789 [cm^2]
	a	=	16.665 [cm]
	Mu	=	23798 [kg-m]
	M1	=	0 [kg-m]
	As'	=	0.0000 [cm^2]
	No. of steel	=	**2**
	As	=	4.02 [cm^2]
	Σ As	=	0.000 [cm^2]
	No. of steel	=	**2**
	As	=	4.02 [cm^2]

Section OK

Check Deflection

Δ all	=	0.94 [cm]		
ρ fy	=	23	<	35 [kg/cm^2]
Y'	=	8.62		
I	=	71458 [cm^4]		
Ec	=	284116 [kg/cm^2]		
Δ	=	0.22 [cm]	<	Δ all **OK**
Δ Time	=	0.14	<	Δ all **OK**

KINGDOM OF THAILAND
CHOKCHAI KHATKHAJORN
โชคชัย ขัดขจร
สย. 4522
REGISTERED PROFESSIONAL ENGINEER

DYNAMIC ENGINEERING CONSULTANT CO., LTD.		Job No.	193018
Design Reinforced Concrete Beam		Rev.	1
(Ultimate Stress Design method in accordance with ACI 318-89)		Initial	CKJ
Beam No.	DB-2	Date	13-Aug-20
Project :	อาคารทิศตะวันออก	File	Beam DB

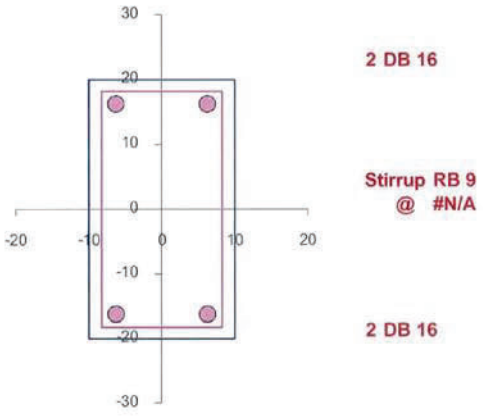

Positive Section

DB-2 (20 X 40)

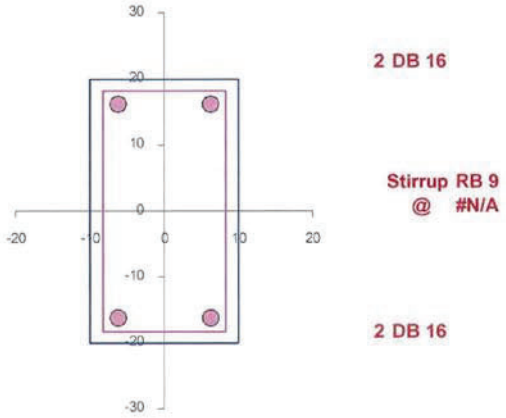

Negative Section

DB-2 (20 X 40)

KINGDOM OF THAILAND
CHOKCHAI KHATKHAJORN
โชคชัย ขัดขจร
สย. 4522
REGISTERED PROFESSIONAL ENGINEER

DYNAMIC ENGINEERING CONSULTANT CO., LTD.	Job No.	193018
Design Reinforced Concrete Beam	Rev.	1
(Ultimate Stress Design method in accordance with ACI 318-89)	Initial	CKJ
Beam No. DB-3	Date	13-Aug-20
Project : อาคารทิศตะวันออก	File	Beam DB

	fc'	=	350	[kg/cm^2]
	fy SD	=	4000	[kg/cm^2]
	fy SR	=	2400	[kg/cm^2]
$M_{-pos.}$	Mu^+	=	10656	[kg-m]
$M_{-neg.}$	Mu^-	=	0	[kg-m]
$V_{max.}$	Vu	=	12075	[kg]
	DL	=	2440	[kg/m]
	LL	=	4460	[kg/m]
Length	Ln	=	350	[cm]
width	b	=	30	[cm]
depth	t	=	50	[cm]
	d'	=	5	[cm]
siding	d"	=	3.5	[cm]

For Positive Moment :

Upper Steel	DB 16
Lower Steel	DB 16
Stirrup Steel	RB 9

	d	=	45 [cm]
	a try	=	3.0514 [cm]
	As	=	6.809 [cm^2]
	a	=	**3.0515** [cm]
	ϕ Bend	=	0.90
	ϕ Shea	=	0.85
	k1	=	0.80
	Es	=	2040000 [kg/cm^2]
	Ec	=	284553 [kg/cm^2]
	n	=	7
	ρ	=	0.0360
	ρ_{max}	=	0.0270
	As	=	36.425 [cm^2]
	a	=	16.325 [cm]
	Mu	=	48305 [kg-m]
	M1	=	0 [kg-m]
	As'	=	0.0000 [cm^2]
	No. of steel	=	**2**
	As	=	4.02 [cm^2]
	Σ As	=	6.809 [cm^2]
	No. of steel	=	**4**
	As	=	8.04 [cm^2]

Section OK

Stirrup Design

$0.53\,\phi\,(fc')^{0.5}\,bd$	=	12047	[kg]
L=Ln/2(Vu - ϕ Vc)/Vu	=	26.6	[cm]
S	=	22.500	[cm]
Used Stirrup		**RB 9 @ 0.225**	**OK**

For Negative Moment :

Upper Steel	DB 16
Lower Steel	DB 16
Stirrup Steel	RB 9

	d	=	45 [cm]
	a try	=	8.7110 [cm]
	As	=	0.000 [cm^2]
	a	=	**3.0515** [cm]
	ϕ Bend	=	0.90
	ϕ Shea	=	0.85
	k1	=	1.05
	Es	=	2040000 [kg/cm^2]
	Ec	=	284553 [kg/cm^2]
	n	=	7
	ρ	=	0.0472
	ρ_{max}	=	0.0354
	As	=	47.808 [cm^2]
	a	=	21.426 [cm]
	Mu	=	59010 [kg-m]
	M1	=	0 [kg-m]
	As'	=	0.0000 [cm^2]
	No. of steel	=	**2**
	As	=	4.02 [cm^2]
	Σ As	=	0.000 [cm^2]
	No. of steel	=	**2**
	As	=	4.02 [cm^2]

Section OK

Check Deflection

Δ all	=	0.97 [cm]			
ρ fy	=	24	<	35	[kg/cm^2]
Y'	=	11.3			
I	=	227813	[cm^4]		
Ec	=	284116	[kg/cm^2]		
Δ	=	0.21 [cm]	<	Δ all	OK
Δ Time	=	0.1	<	Δ all	OK

KINGDOM OF THAILAND
CHOKCHAI KHATKHAJORN
โชคชัย ขัดขจร
สย. 4522
REGISTERED PROFESSIONAL ENGINEER

DYNAMIC ENGINEERING CONSULTANT CO., LTD.		Job No.	193018
Design Reinforced Concrete Beam		Rev.	1
(Ultimate Stress Design method in accordance with ACI 318-89)		Initial	CKJ
Beam No.	DB-3	Date	13-Aug-20
Project :	อาคารทิศตะวันออก	File	Beam DB

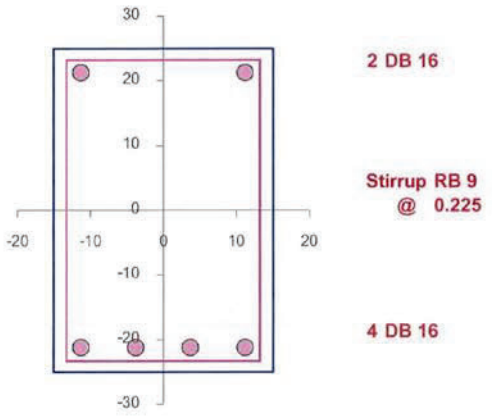

Positive Section

DB-3 (30 X 50)

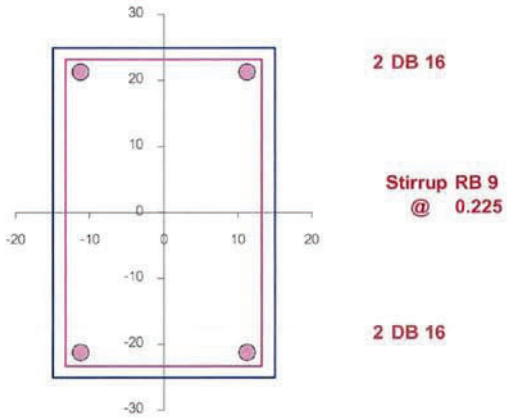

Negative Section

DB-3 (30 X 50)

KINGDOM OF THAILAND
CHOKCHAI KHATKHAJORN
โชคชัย ขัดขจร
สย. 4522
REGISTERED PROFESSIONAL ENGINEER

DYNAMIC ENGINEERING CONSULTANT CO., LTD.

RC-I EXCEL — **Ultimate Stress Design method in accordance with ACI 318-89**

Design Reinforced Concrete Beam

Project	อาคารทิศตะวันออก โซน ซี	**Beam Code**	DB-3A
Engineer	CKJ	**File Name**	Beam
		Date	6 Aug 20

	fc'	=	350	[kg/cm^2]
	fy SD	=	4000	[kg/cm^2]
	fy SD	=	4000	[kg/cm^2]
$M_{-pos.}$	Mu$^+$	=	35354	[kg-m]
$M_{-neg.}$	Mu$^-$	=	17500	[kg-m]
$V_{max.}$	Vu	=	21265	[kg]
	DL	=	2350	[kg/m]
	LL	=	900	[kg/m]
Length	Ln	=	610	[cm]
width	b	=	25	[cm]
depth	t	=	60	[cm]
	d'	=	5	[cm]
siding	d"	=	3.5	[cm]

For Positive Moment :

Upper Steel	DB28
Lower Steel	DB28
Stirrup Steel	DB12

	d	=	55	[cm]
	a try	=	10.6303	[cm]
	As	=	19.766	[cm^2]
	a	=	**10.6303**	[cm]
	ϕ Bend	=	0.90	
	ϕ Shea	=	0.85	
	k1	=	0.80	
	Es	=	2040000	[kg/cm^2]
	Ec	=	284553	[kg/cm^2]
	n	=	7	
	ρ	=	0.0360	
	ρ_{max}	=	0.0270	
	As	=	37.099	[cm^2]
	a	=	19.953	[cm]
	Mu	=	60133	[kg-m]
	M1	=	0	[kg-m]
	As'	=	0.0000	[cm^2]
No. of steel		=	**2**	
	As	=	12.32	[cm^2]
	Σ As	=	19.766	[cm^2]
No. of steel		=	**4**	
	As	=	24.63	[cm^2]

Section OK

Stirrup Design

0.53 ϕ (fc')$^{0.5}$ bd	=	12270	[kg]	
L=Ln/2(Vu - ϕ Vc)/Vu	=	155.4	[cm]	
S	=	27.500	[cm]	
Used Stirrup	1	DB12 @ 0.250		OK

For Negative Moment :

Upper Steel	DB28
Lower Steel	DB28
Stirrup Steel	DB12

	d	=	55	[cm]
	a try	=	8.7110	[cm]
	As	=	9.599	[cm^2]
	a	=	**5.1622**	[cm]
	ϕ Bend	=	0.90	
	ϕ Shea	=	0.85	
	k1	=	1.05	
	Es	=	2040000	[kg/cm^2]
	Ec	=	284553	[kg/cm^2]
	n	=	7	
	ρ	=	0.0472	
	ρ_{max}	=	0.0354	
	As	=	48.693	[cm^2]
	a	=	26.188	[cm]
	Mu	=	73459	[kg-m]
	M1	=	0	[kg-m]
	As'	=	0.0000	[cm^2]
No. of steel		=	**2**	
	As	=	12.32	[cm^2]
	Σ As	=	9.599	[cm^2]
No. of steel		=	**2**	
	As	=	12.32	[cm^2]

Section OK

Check Deflection

Δ all	=	1.69	[cm]		
ρ fy	=	72	>	35	[kg/cm^2]
Y'	=	21.5			
I	=	276308	[cm^4]		
Ec	=	284116	[kg/cm^2]		
Δ	=	0.75 [cm]	<	Δ all	OK
Δ Time	=	0.5	<	Δ all	OK

KINGDOM OF THAILAND
CHOKCHAI KHATKHAJORN
โชคชัย ขัดขจร
สย. 4522
REGISTERED PROFESSIONAL ENGINEER

DYNAMIC ENGINEERING CONSULTANT CO., LTD.

RC-I EXCEL — Ultimate Stress Design method in accordance with ACI 318-89

Design Reinforced Concrete Beam

Project	อาคารทิศตะวันออก โซน ซี	Beam Code	DB-3A
Engineer	CKJ	File Name	Beam
		Date	6 Aug 20

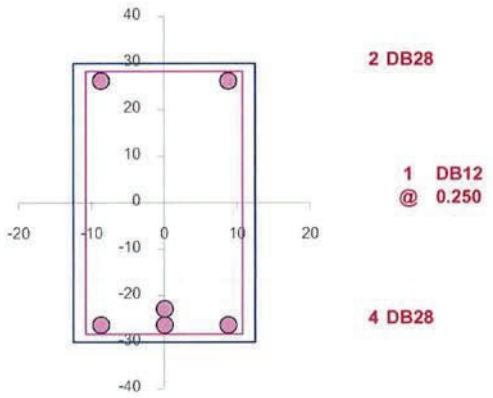

Positive Section
DB-3A (25 X 60)

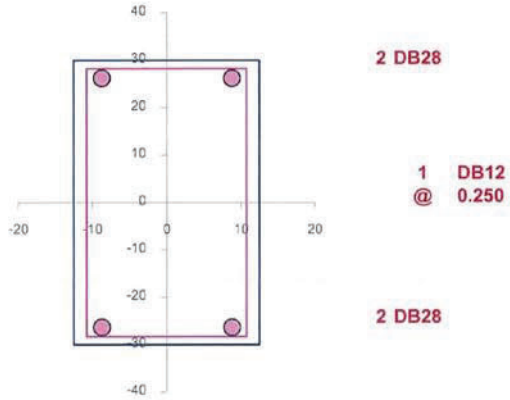

Negative Section
DB-3A (25 X 60)

KINGDOM OF THAILAND
CHOKCHAI KHATKHAJORN
โชคชัย ขัดขจร
สย. 4522
REGISTERED PROFESSIONAL ENGINEER

DYNAMIC ENGINEERING CONSULTANT CO., LTD.

RC-I EXCEL — Ultimate Stress Design method in accordance with ACI 318

Design Reinforced Concrete Beam

Project	อาคารทิศตะวันออก โซน ซี	Beam Code	DB-3B
Engineer	CKJ	File Name	Beam
		Date	12 Nov 20

	fc'	=	350	[kg/cm²]
	fy SD	=	4000	[kg/cm²]
	fy SD	=	4000	[kg/cm²]
$M_{pos.}$	Mu^+	=	40000	[kg-m]
$M_{neg.}$	Mu^-	=	150000	[kg-m]
$V_{max.}$	Vu	=	38600	[kg]
	DL	=	1765	[kg/m]
	LL	=	1360	[kg/m]
Length	Ln	=	250	[cm]
width	b	=	30	[cm]
depth	t	=	80	[cm]
	d'	=	5	[cm]
siding	d"	=	3.5	[cm]

For Positive Moment :

Upper Steel: DB28
Lower Steel: DB28
Stirrup Steel: DB12

d	=	75	[cm]
a try	=	6.9627	[cm]
As	=	15.536	[cm²]
a	=	**6.9629**	[cm]
ϕ Bend	=	0.90	
ϕ Shea	=	0.85	
k1	=	0.80	
Es	=	2040000	[kg/cm²]
Ec	=	284553	[kg/cm²]
n	=	7	
ρ	=	0.0360	
ρ_{max}	=	0.0270	
As	=	60.708	[cm²]
a	=	27.208	[cm]
Mu	=	134181	[kg-m]
M1	=	0	[kg-m]
As'	=	0.0000	[cm²]
No. of steel	=	**2**	
As	=	12.32	[cm²]
Σ As	=	15.536	[cm²]
No. of steel	=	**3**	
As	=	18.47	[cm²]

Section OK

For Negative Moment :

Upper Steel: DB28
Lower Steel: DB28
Stirrup Steel: DB12

d	=	75	[cm]
a try	=	8.7110	[cm]
As	=	58.981	[cm²]
a	=	**26.4340**	[cm]
ϕ Bend	=	0.90	
ϕ Shea	=	0.85	
k1	=	1.05	
Es	=	2040000	[kg/cm²]
Ec	=	284553	[kg/cm²]
n	=	7	
ρ	=	0.0472	
ρ_{max}	=	0.0354	
As	=	79.680	[cm²]
a	=	35.711	[cm]
Mu	=	163917	[kg-m]
M1	=	0	[kg-m]
As'	=	0.0000	[cm²]
No. of steel	=	**2**	
As	=	12.32	[cm²]
Σ As	=	58.981	[cm²]
No. of steel	=	**10**	
As	=	61.58	[cm²]

Section OK

Stirrup Design

$0.53\,\phi\,(fc')^{0.5}\,bd$	=	20079	[kg]
L=Ln/2(Vu - ϕ Vc)/Vu	=	69.7	[cm]
S	=	37.500	[cm]

Used Stirrup 2 DB12 @ 0.360 OK

Check Deflection

Δ all	=	0.69 [cm]		
ρ fy	=	33	<	35 [kg/cm²]
Y'	=	21.5		
I	=	1054688	[cm⁴]	
Ec	=	284116	[kg/cm²]	
Δ	=	0.01 [cm]	<	Δ all OK
Δ Time	=	0	<	Δ all OK

KINGDOM OF THAILAND — CHOKCHAI KHATKHAJORN — โชคชัย ขัดขจร — สย. 4522 — REGISTERED PROFESSIONAL ENGINEER

DYNAMIC ENGINEERING CONSULTANT CO., LTD.

RC-I EXCEL — **Ultimate Stress Design method in accordance with ACI 318**

Design Reinforced Concrete Beam

Project	อาคารทิศตะวันออก โซน ซี	Beam Code	DB-3B
Engineer	CKJ	File Name	Beam
		Date	12 Nov 20

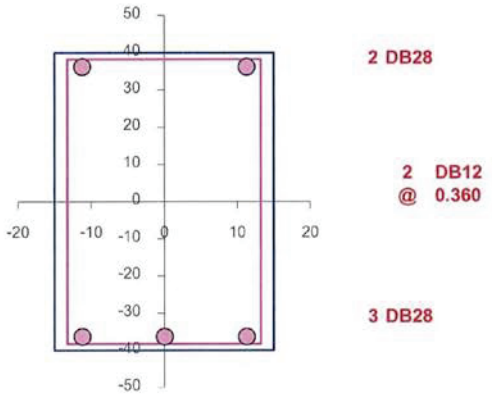

Positive Section
DB-3B (30 X 80)

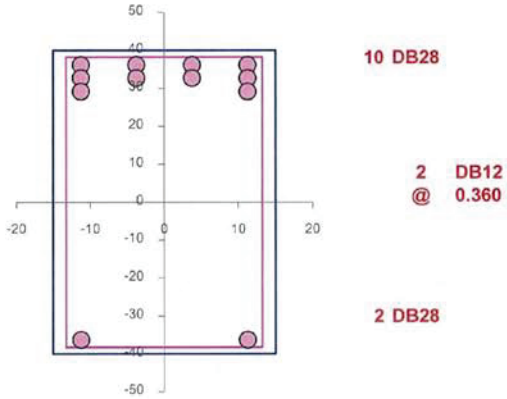

Negative Section
DB-3B (30 X 80)

KINGDOM OF THAILAND
CHOKCHAI KHATKHAJORN
โชคชัย ขัดขจร
สย. 4522
REGISTERED PROFESSIONAL ENGINEER

DYNAMIC ENGINEERING CONSULTANT CO., LTD.	Job No.	193018
Design Reinforced Concrete Beam	Rev.	1
(Ultimate Stress Design method in accordance with ACI 318-89)	Initial	CKJ
Beam No. DB-4	Date	13-Aug-20
Project : อาคารทิศตะวันออก	File	Beam DB

	fc'	=	350	[kg/cm^2]
	fy SD	=	4000	[kg/cm^2]
	fy SR	=	2400	[kg/cm^2]
$M_{+pos.}$	Mu$^+$	=	8840	[kg-m]
$M_{-neg.}$	Mu$^-$	=	0	[kg-m]
$V_{max.}$	Vu	=	9264	[kg]
	DL	=	1850	[kg/m]
	LL	=	1350	[kg/m]
Length	Ln	=	340	[cm]
width	b	=	25	[cm]
depth	t	=	50	[cm]
	d'	=	5	[cm]
siding	d"	=	3.5	[cm]

For Positive Moment :

Upper Steel	DB 16
Lower Steel	DB 16
Stirrup Steel	RB 9

	d	=	45 [cm]
	a try	=	3.0372 [cm]
	As	=	5.647 [cm^2]
	a	=	**3.0372** [cm]
	ϕ Bend	=	0.90
	ϕ Shea	=	0.85
	k1	=	0.80
	Es	=	2040000 [kg/cm^2]
	Ec	=	284553 [kg/cm^2]
	n	=	7
	ρ	=	0.0360
	ρ_{max}	=	0.0270
	As	=	30.354 [cm^2]
	a	=	16.325 [cm]
	Mu	=	40254 [kg-m]
	M1	=	0 [kg-m]
	As'	=	0.0000 [cm^2]
	No. of steel	=	**2**
	As	=	4.02 [cm^2]
	Σ As	=	5.647 [cm^2]
	No. of steel	=	**3**
	As	=	6.03 [cm^2]

Section OK

Stirrup Design

0.53 ϕ (fc')$^{0.5}$ bd	=	10039	[kg]
L=Ln/2(Vu - ϕ Vc)/Vu	=	13.4	[cm]
S	=	-150.646	[cm]
Used Stirrup		RB 9 @ #N/A	#N/A

For Negative Moment :

Upper Steel	DB 16
Lower Steel	DB 16
Stirrup Steel	RB 9

	d	=	45 [cm]
	a try	=	8.7110 [cm]
	As	=	0.000 [cm^2]
	a	=	**3.0372** [cm]
	ϕ Bend	=	0.90
	ϕ Shea	=	0.85
	k1	=	1.05
	Es	=	2040000 [kg/cm^2]
	Ec	=	284553 [kg/cm^2]
	n	=	7
	ρ	=	0.0472
	ρ_{max}	=	0.0354
	As	=	39.840 [cm^2]
	a	=	21.426 [cm]
	Mu	=	49175 [kg-m]
	M1	=	0 [kg-m]
	As'	=	0.0000 [cm^2]
	No. of steel	=	**2**
	As	=	4.02 [cm^2]
	Σ As	=	0.000 [cm^2]
	No. of steel	=	**2**
	As	=	4.02 [cm^2]

Section OK

Check Deflection

Δ all	=	0.94 [cm]			
ρ fy	=	21	<	35	[kg/cm^2]
Y'	=	10.8			
I	=	189844	[cm^4]		
Ec	=	284116	[kg/cm^2]		
Δ	=	0.10 [cm]	<	Δ all	OK
Δ Time	=	0.04	<	Δ all	OK

KINGDOM OF THAILAND
CHOKCHAI KHATKHAJORN
โชคชัย ขัดขจร
สย. 4522
REGISTERED PROFESSIONAL ENGINEER

DYNAMIC ENGINEERING CONSULTANT CO., LTD.	Job No.	193018
Design Reinforced Concrete Beam	Rev.	1
(Ultimate Stress Design method in accordance with ACI 318-89)	Initial	CKJ
Beam No. DB-4	Date	13-Aug-20
Project : อาคารทิศตะวันออก	File	Beam DB

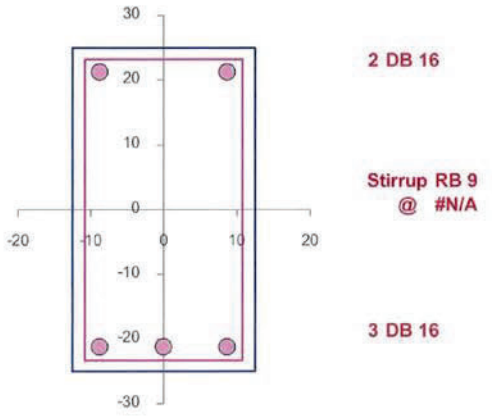

Positive Section

DB-4 (25 X 50)

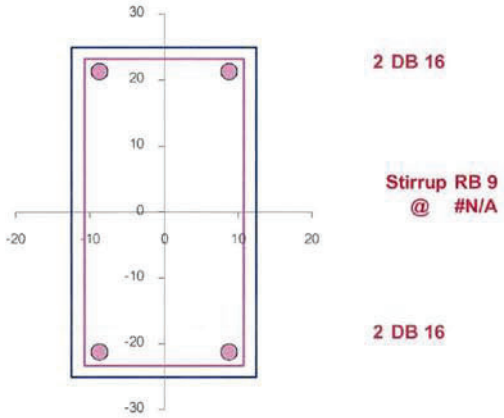

Negative Section

DB-4 (25 X 50)

DYNAMIC ENGINEERING CONSULTANT CO., LTD.	Job No.	193018
Design Reinforced Concrete Beam	Rev.	1
(Ultimate Stress Design method in accordance with ACI 318-89)	Initial	CKJ
Beam No. DB-5	Date	13-Aug-20
Project : อาคารทิศตะวันออก	File	Beam DB

	fc'	=	350	[kg/cm^2]
	fy SD	=	4000	[kg/cm^2]
	fy SR	=	2400	[kg/cm^2]
$M_{+pos.}$	Mu^+	=	15750	[kg-m]
$M_{-neg.}$	Mu^-	=	0	[kg-m]
$V_{max.}$	Vu	=	9550	[kg]
	DL	=	1750	[kg/m]
	LL	=	850	[kg/m]
Length	Ln	=	550	[cm]
width	b	=	25	[cm]
depth	t	=	50	[cm]
	d'	=	5	[cm]
siding	d''	=	3.5	[cm]

For Positive Moment :

Upper Steel	DB 20
Lower Steel	DB 20
Stirrup Steel	RB 9

	d	=	45 [cm]
	a try	=	5.5735 [cm]
	As	=	10.364 [cm^2]
	a	=	**5.5739** [cm]
	ϕ Bend	=	0.90
	ϕ Shea	=	0.85
	k1	=	0.80
	Es	=	2040000 [kg/cm^2]
	Ec	=	284553 [kg/cm^2]
	n	=	7
	ρ	=	0.0360
	ρ_{max}	=	0.0270
	As	=	30.354 [cm^2]
	a	=	16.325 [cm]
	Mu	=	40254 [kg-m]
	M1	=	0 [kg-m]
	As'	=	0.0000 [cm^2]
No. of steel		=	**2**
	As	=	6.28 [cm^2]
	Σ As	=	10.364 [cm^2]
No. of steel		=	**4**
	As	=	12.57 [cm^2]

Section OK

Stirrup Design

$0.53\,\phi\,(fc')^{0.5}\,bd$	=	10039	[kg]
L=Ln/2(Vu - ϕ Vc)/Vu	=	29.3	[cm]
S	=	-238.694	[cm]

Used Stirrup RB 9 @ #N/A #N/A

For Negative Moment :

Upper Steel	DB 20
Lower Steel	DB 20
Stirrup Steel	RB 9

	d	=	45 [cm]
	a try	=	8.7110 [cm]
	As	=	0.000 [cm^2]
	a	=	**5.5739** [cm]
	ϕ Bend	=	0.90
	ϕ Shea	=	0.85
	k1	=	1.05
	Es	=	2040000 [kg/cm^2]
	Ec	=	284553 [kg/cm^2]
	n	=	7
	ρ	=	0.0472
	ρ_{max}	=	0.0354
	As	=	39.840 [cm^2]
	a	=	21.426 [cm]
	Mu	=	49175 [kg-m]
	M1	=	0 [kg-m]
	As'	=	0.0000 [cm^2]
No. of steel		=	**2**
	As	=	6.28 [cm^2]
	Σ As	=	0.000 [cm^2]
No. of steel		=	**2**
	As	=	6.28 [cm^2]

Section OK

Check Deflection

Δ all =	1.53 [cm]			
ρ fy =	45	>	35	[kg/cm^2]
Y' =	14.6			
I =	107228	[cm^4]		
Ec =	284116	[kg/cm^2]		
Δ =	1.02 [cm]	<	Δ all	**OK**
Δ Time =	0.65	<	Δ all	**OK**

KINGDOM OF THAILAND
CHOKCHAI KHATKHAJORN
โชคชัย ขัดขจร
สย. 4522
REGISTERED PROFESSIONAL ENGINEER

DYNAMIC ENGINEERING CONSULTANT CO., LTD.		Job No.	193018
Design Reinforced Concrete Beam		Rev.	1
(Ultimate Stress Design method in accordance with ACI 318-89)		Initial	CKJ
Beam No.	DB-5	Date	13-Aug-20
Project :	อาคารทิศตะวันออก	File	Beam DB

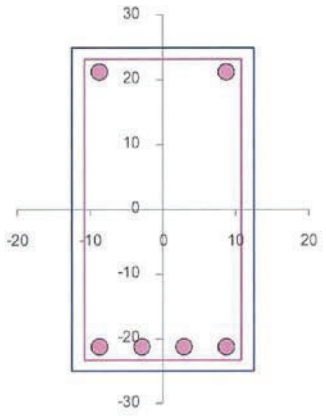

2 DB 20

Stirrup RB 9
@ #N/A

4 DB 20

Positive Section

DB-5 (25 X 50)

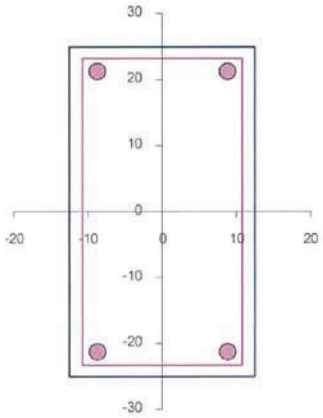

2 DB 20

Stirrup RB 9
@ #N/A

2 DB 20

Negative Section

DB-5 (25 X 50)

KINGDOM OF THAILAND
CHOKCHAI KHATKHAJORN
โชคชัย ขัดขจร
สย. 4522
REGISTERED PROFESSIONAL ENGINEER

DYNAMIC ENGINEERING CONSULTANT CO., LTD.

Design Reinforced Concrete Beam
(Ultimate Stress Design method in accordance with ACI 318-89)

Job No.	193018	Beam No.	DB-6
Rev.	1	Project :	อาคารทิศตะวันออก
Initial	CKJ		
Date	13-Aug-20		
File	Beam DB		

	fc'	=	350	[kg/cm²]
	fy SD	=	4000	[kg/cm²]
	fy SR	=	2400	[kg/cm²]
$M_{-pos.}$	Mu^+	=	45697	[kg-m]
$M_{-neg.}$	Mu^-	=	20000	[kg-m]
$V_{max.}$	Vu	=	22480	[kg]
	DL	=	2740	[kg/m]
	LL	=	1190	[kg/m]
Length	Ln	=	800	[cm]
width	b	=	25	[cm]
depth	t	=	80	[cm]
	d'	=	5	[cm]
siding	d"	=	3.5	[cm]

For Positive Moment :

Upper Steel	DB 25
Lower Steel	DB 25
Stirrup Steel	RB 9

	d	=	75 [cm]
	a try	=	9.7336 [cm]
	As	=	18.099 [cm²]
	a	=	**9.7341** [cm]
	ϕ Bend	=	0.90
	ϕ Shea	=	0.85
	k1	=	0.80
	Es	=	2040000 [kg/cm²]
	Ec	=	284553 [kg/cm²]
	n	=	7
	ρ	=	0.0360
	ρ_{max}	=	0.0270
	As	=	50.590 [cm²]
	a	=	27.208 [cm]
	Mu	=	111817 [kg-m]
	M1	=	0 [kg-m]
	As'	=	0.0000 [cm²]
	No. of steel	=	**2**
	As	=	9.82 [cm²]
	Σ As	=	18.099 [cm²]
	No. of steel	=	**4**
	As	=	19.63 [cm²]

Section OK

Stirrup Design

$0.53\ \phi\ (fc')^{0.5}\ bd$	=	16732	[kg]
L=Ln/2(Vu - ϕ Vc)/Vu	=	146.9	[cm]
S	=	33.869	[cm]
Used Stirrup		**RB 9 @ 0.300**	**OK**

For Negative Moment :

Upper Steel	DB 25
Lower Steel	DB 25
Stirrup Steel	RB 9

	d	=	75 [cm]
	a try	=	8.7110 [cm]
	As	=	7.921 [cm²]
	a	=	**9.7341** [cm]
	ϕ Bend	=	0.90
	ϕ Shea	=	0.85
	k1	=	1.05
	Es	=	2040000 [kg/cm²]
	Ec	=	284553 [kg/cm²]
	n	=	7
	ρ	=	0.0472
	ρ_{max}	=	0.0354
	As	=	66.400 [cm²]
	a	=	35.711 [cm]
	Mu	=	136598 [kg-m]
	M1	=	0 [kg-m]
	As'	=	0.0000 [cm²]
	No. of steel	=	**2**
	As	=	9.82 [cm²]
	Σ As	=	7.921 [cm²]
	No. of steel	=	**2**
	As	=	9.82 [cm²]

Section OK

Check Deflection

Δ all	=	2.22 [cm]		
ρ fy	=	42	>	35 [kg/cm²]
Y'	=	23.7		
I	=	472644 [cm⁴]		
Ec	=	284116 [kg/cm²]		
Δ	=	1.56 [cm]	<	Δ all **OK**
Δ Time	=	1.02	<	Δ all **OK**

KINGDOM OF THAILAND
CHOKCHAI KHATKHAJORN
โชคชัย ขัดขจร
สย. 4522
REGISTERED PROFESSIONAL ENGINEER

DYNAMIC ENGINEERING CONSULTANT CO., LTD.		Job No.	193018
Design Reinforced Concrete Beam		Rev.	1
(Ultimate Stress Design method in accordance with ACI 318-89)		Initial	CKJ
Beam No.	DB-6	Date	13-Aug-20
Project :	อาคารทิศตะวันออก	File	Beam DB

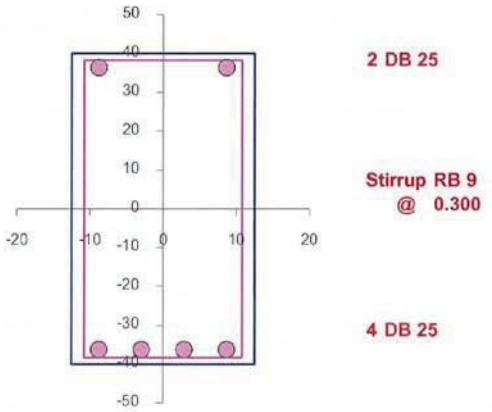

Positive Section

DB-6 (25 X 80)

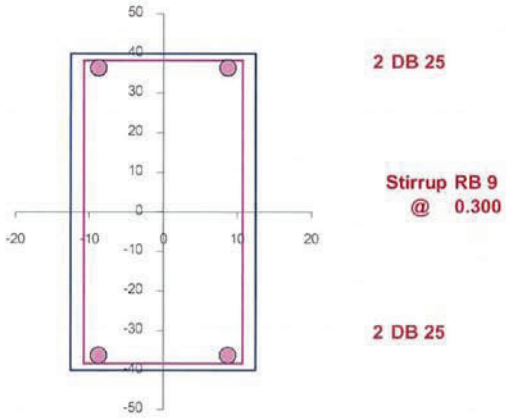

Negative Section

DB-6 (25 X 80)

KINGDOM OF THAILAND
CHOKCHAI KHATKHAJORN
โชคชัย ขัดขจร
สย. 4522
REGISTERED PROFESSIONAL ENGINEER

DYNAMIC ENGINEERING CONSULTANT CO., LTD.	Job No.	193018
Design Reinforced Concrete Beam	Rev.	1
(Ultimate Stress Design method in accordance with ACI 318-89)	Initial	CKJ
Beam No. DB-7	Date	13-Aug-20
Project : อาคารทิศตะวันออก	File	Beam DB

	fc'	=	350	[kg/cm^2]
	fy SD	=	4000	[kg/cm^2]
	fy SR	=	2400	[kg/cm^2]
$M_{+pos.}$	Mu^+	=	20550	[kg-m]
$M_{-neg.}$	Mu^-	=	0	[kg-m]
$V_{max.}$	Vu	=	12350	[kg]
	DL	=	2020	[kg/m]
	LL	=	1360	[kg/m]
Length	Ln	=	550	[cm]
width	b	=	25	[cm]
depth	t	=	60	[cm]
	d'	=	5	[cm]
siding	d"	=	3.5	[cm]

For Positive Moment :

Upper Steel: DB 20
Lower Steel: DB 20
Stirrup Steel: RB 9

d	=	55	[cm]
a try	=	5.8975	[cm]
As	=	10.967	[cm^2]
a	=	**5.8981**	[cm]
ϕ Bend	=	0.90	
ϕ Shea	=	0.85	
k1	=	0.80	
Es	=	2040000	[kg/cm^2]
Ec	=	284553	[kg/cm^2]
n	=	7	
ρ	=	0.0360	
ρ_{max}	=	0.0270	
As	=	37.099	[cm^2]
a	=	19.953	[cm]
Mu	=	60133	[kg-m]
M1	=	0	[kg-m]
As'	=	0.0000	[cm^2]
No. of steel	=	**2**	
As	=	6.28	[cm^2]
Σ As	=	10.967	[cm^2]
No. of steel	=	**4**	
As	=	12.57	[cm^2]

Section OK

Stirrup Design

$0.53\,\phi\,(fc')^{0.5}\,bd$	=	12270	[kg]
L=Ln/2(Vu - ϕ Vc)/Vu	=	42.8	[cm]
S	=	27.500	[cm]

Used Stirrup RB 9 @ 0.250 OK

For Negative Moment :

Upper Steel: DB 20
Lower Steel: DB 20
Stirrup Steel: RB 9

d	=	55	[cm]
a try	=	8.7110	[cm]
As	=	0.000	[cm^2]
a	=	**5.8981**	[cm]
ϕ Bend	=	0.90	
ϕ Shea	=	0.85	
k1	=	1.05	
Es	=	2040000	[kg/cm^2]
Ec	=	284553	[kg/cm^2]
n	=	7	
ρ	=	0.0472	
ρ_{max}	=	0.0354	
As	=	48.693	[cm^2]
a	=	26.188	[cm]
Mu	=	73459	[kg-m]
M1	=	0	[kg-m]
As'	=	0.0000	[cm^2]
No. of steel	=	**2**	
As	=	6.28	[cm^2]
Σ As	=	0.000	[cm^2]
No. of steel	=	**2**	
As	=	6.28	[cm^2]

Section OK

Check Deflection

Δ all	=	1.53	[cm]		
ρ fy	=	37	>	35	[kg/cm^2]
Y'	=	16.5			
I	=	167819	[cm^4]		
Ec	=	284116	[kg/cm^2]		
Δ	=	0.84	[cm] <	Δ all	OK
Δ Time	=	0.51	<	Δ all	OK

KINGDOM OF THAILAND
CHOKCHAI KHATKHAJORN
โชคชัย ขัดขจร
สย. 4522
REGISTERED PROFESSIONAL ENGINEER

DYNAMIC ENGINEERING CONSULTANT CO., LTD.		Job No.	193018
Design Reinforced Concrete Beam		Rev.	1
(Ultimate Stress Design method in accordance with ACI 318-89)		Initial	CKJ
Beam No.	DB-7	Date	13-Aug-20
Project :	อาคารทิศตะวันออก	File	Beam DB

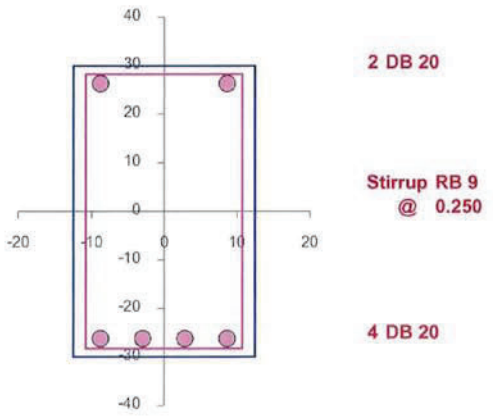

Positive Section

DB-7 (25 X 60)

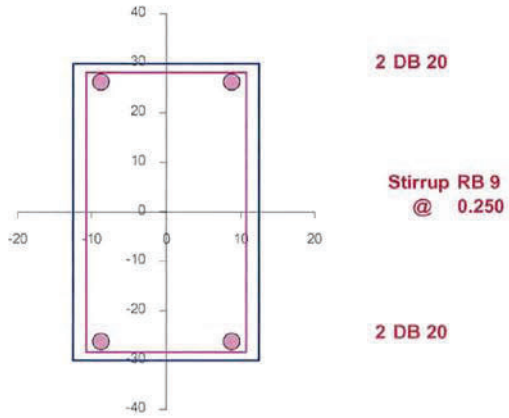

Negative Section

DB-7 (25 X 60)

KINGDOM OF THAILAND
CHOKCHAI KHATKHAJORN
โชคชัย ขัดขจร
สย. 4522
REGISTERED PROFESSIONAL ENGINEER

DYNAMIC ENGINEERING CONSULTANT CO., LTD.		Job No.	193018
Design Reinforced Concrete Beam		Rev.	1
(Ultimate Stress Design method in accordance with ACI 318-89)		Initial	CKJ
Beam No.	DB-7A	Date	13-Aug-20
Project :	อาคารทิศตะวันออก	File	Beam DB

	fc'	=	350	[kg/cm^2]
	fy SD	=	4000	[kg/cm^2]
	fy SR	=	2400	[kg/cm^2]
$M_{+pos.}$	Mu^+	=	32192	[kg-m]
$M_{-neg.}$	Mu^-	=	16000	[kg-m]
$V_{max.}$	Vu	=	17252	[kg]
	DL	=	2150	[kg/m]
	LL	=	1350	[kg/m]
Length	Ln	=	520	[cm]
width	b	=	40	[cm]
depth	t	=	60	[cm]
	d'	=	5	[cm]
siding	d"	=	3.5	[cm]

For Positive Moment :

Upper Steel	DB 25
Lower Steel	DB 25
Stirrup Steel	RB 9

d	=	55	[cm]
a try	=	5.7665	[cm]
As	=	17.158	[cm^2]
a	=	**5.7674**	[cm]
ϕ Bend	=	0.90	
ϕ Shea	=	0.85	
k1	=	0.80	
Es	=	2040000	[kg/cm^2]
Ec	=	284553	[kg/cm^2]
n	=	7	
ρ	=	0.0360	
ρ_{max}	=	0.0270	
As	=	59.359	[cm^2]
a	=	19.953	[cm]
Mu	=	96212	[kg-m]
M1	=	0	[kg-m]
As'	=	0.0000	[cm^2]
No. of steel	=	**2**	
As	=	9.82	[cm^2]
Σ As	=	17.158	[cm^2]
No. of steel	=	**4**	
As	=	19.63	[cm^2]

Section OK

Stirrup Design

$0.53\,\phi\,(fc')^{0.5}\,bd$	=	19632	[kg]
L=Ln/2(Vu - ϕ Vc)/Vu	=	8.5	[cm]
S	=	-59.970	[cm]

Used Stirrup RB 9 @ #N/A #N/A

For Negative Moment :

Upper Steel	DB 25
Lower Steel	DB 25
Stirrup Steel	RB 9

d	=	55	[cm]
a try	=	8.7110	[cm]
As	=	8.528	[cm^2]
a	=	**5.7674**	[cm]
ϕ Bend	=	0.90	
ϕ Shea	=	0.85	
k1	=	1.05	
Es	=	2040000	[kg/cm^2]
Ec	=	284553	[kg/cm^2]
n	=	7	
ρ	=	0.0472	
ρ_{max}	=	0.0354	
As	=	77.909	[cm^2]
a	=	26.188	[cm]
Mu	=	117535	[kg-m]
M1	=	0	[kg-m]
As'	=	0.0000	[cm^2]
No. of steel	=	**2**	
As	=	9.82	[cm^2]
Σ As	=	8.528	[cm^2]
No. of steel	=	**2**	
As	=	9.82	[cm^2]

Section OK

Check Deflection

Δ all	=	1.44	[cm]		
ρ fy	=	36	>	35	[kg/cm^2]
Y'	=	16.3			
I	=	263593	[cm^4]		
Ec	=	284116	[kg/cm^2]		
Δ	=	0.44	[cm] <	Δ all	OK
Δ Time	=	0.27	<	Δ all	OK

KINGDOM OF THAILAND
CHOKCHAI KHATKHAJORN
โชคชัย ขัดขจร
สย. 4522
REGISTERED PROFESSIONAL ENGINEER

DYNAMIC ENGINEERING CONSULTANT CO., LTD.		Job No.	193018
Design Reinforced Concrete Beam		Rev.	1
(Ultimate Stress Design method in accordance with ACI 318-89)		Initial	CKJ
Beam No.	DB-7A	Date	13-Aug-20
Project :	อาคารทิศตะวันออก	File	Beam DB

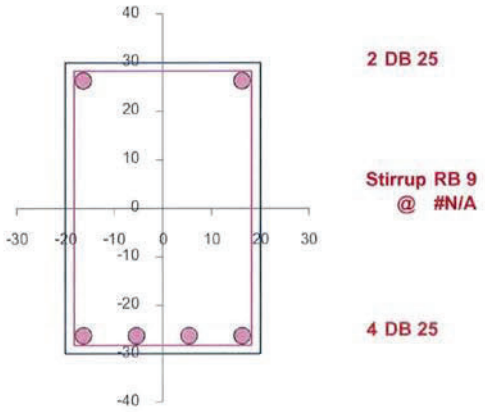

Positive Section

DB-7A (40 X 60)

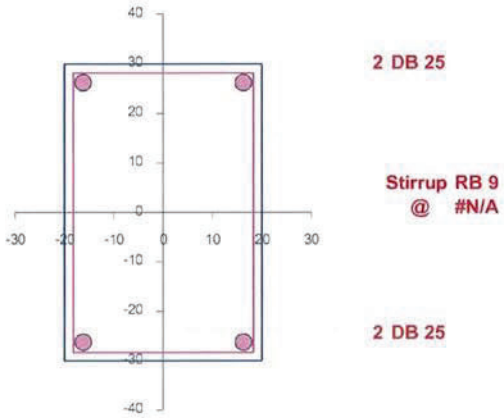

Negative Section

DB-7A (40 X 60)

KINGDOM OF THAILAND
CHOKCHAI KHATKHAJORN
โชคชัย ขัดขจร
สย. 4522
REGISTERED PROFESSIONAL ENGINEER

DYNAMIC ENGINEERING CONSULTANT CO., LTD.

Design Reinforced Concrete Beam
(Ultimate Stress Design method in accordance with ACI 318-89)

Job No.	193018		
Rev.	1		
Initial	CKJ		
Date	13-Aug-20		
File	Beam DB		

Beam No. DB-8

Project : อาคารทิศตะวันออก

	fc'	=	350	[kg/cm²]
	fy SD	=	4000	[kg/cm²]
	fy SR	=	2400	[kg/cm²]
$M_{+pos.}$	Mu^+	=	47079	[kg-m]
$M_{-neg.}$	Mu^-	=	23500	[kg-m]
$V_{max.}$	Vu	=	26276	[kg]
	DL	=	2640	[kg/m]
	LL	=	1190	[kg/m]
Length	Ln	=	670	[cm]
width	b	=	30	[cm]
depth	t	=	70	[cm]
	d'	=	5	[cm]
siding	d"	=	3.5	[cm]

For Positive Moment :

Upper Steel: DB 25
Lower Steel: DB 25
Stirrup Steel: RB 9

d	=	65	[cm]
a try	=	9.7480	[cm]
As	=	21.750	[cm²]
a	=	**9.7480**	[cm]
ϕ Bend	=	0.90	
ϕ Shea	=	0.85	
k1	=	0.80	
Es	=	2040000	[kg/cm²]
Ec	=	284553	[kg/cm²]
n	=	7	
ρ	=	0.0360	
ρ_{max}	=	0.0270	
As	=	52.614	[cm²]
a	=	23.580	[cm]
Mu	=	100784	[kg-m]
M1	=	0	[kg-m]
As'	=	0.0000	[cm²]
No. of steel	=	**2**	
As	=	9.82	[cm²]
Σ As	=	21.750	[cm²]
No. of steel	=	**5**	
As	=	24.54	[cm²]

Section OK

Stirrup Design

$0.53\ \phi\ (fc')^{0.5}$ bd =	17402	[kg]	
L=Ln/2(Vu - ϕ Vc)/Vu =	146.4	[cm]	
S =	19.011	[cm]	
Used Stirrup	**RB 9 @ 0.175**		**OK**

For Negative Moment :

Upper Steel: DB 25
Lower Steel: DB 25
Stirrup Steel: RB 9

d	=	65	[cm]
a try	=	8.7110	[cm]
As	=	10.857	[cm²]
a	=	**9.7480**	[cm]
ϕ Bend	=	0.90	
ϕ Shea	=	0.85	
k1	=	1.05	
Es	=	2040000	[kg/cm²]
Ec	=	284553	[kg/cm²]
n	=	7	
ρ	=	0.0472	
ρ_{max}	=	0.0354	
As	=	69.056	[cm²]
a	=	30.949	[cm]
Mu	=	123120	[kg-m]
M1	=	0	[kg-m]
As'	=	0.0000	[cm²]
No. of steel	=	**2**	
As	=	9.82	[cm²]
Σ As	=	10.857	[cm²]
No. of steel	=	**3**	
As	=	14.73	[cm²]

Section OK

Check Deflection

Δ all =	1.86	[cm]		
ρ fy =	50	>	35	[kg/cm²]
Y' =	22.2			
I =	424129	[cm⁴]		
Ec =	284116	[kg/cm²]		
Δ =	0.83	[cm] <	Δ all	**OK**
Δ Time =	1.36	<	Δ all	**OK**

KINGDOM OF THAILAND
CHOKCHAI KHATKHAJORN
โชคชัย ขัดขจร
สย. 4522
REGISTERED PROFESSIONAL ENGINEER

DYNAMIC ENGINEERING CONSULTANT CO., LTD.		Job No.	193018
Design Reinforced Concrete Beam		Rev.	1
(Ultimate Stress Design method in accordance with ACI 318-89)		Initial	CKJ
Beam No.	DB-8	Date	13-Aug-20
Project :	อาคารทิศตะวันออก	File	Beam DB

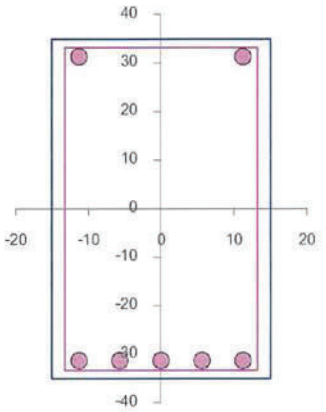

2 DB 25

Stirrup RB 9 @ 0.175

5 DB 25

Positive Section

DB-8 (30 X 70)

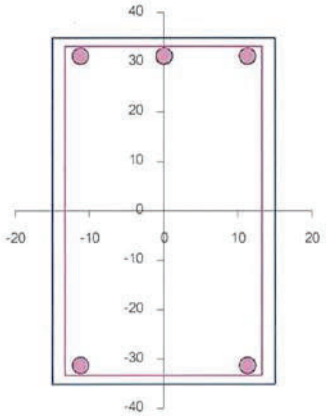

3 DB 25

Stirrup RB 9 @ 0.175

2 DB 25

Negative Section

DB-8 (30 X 70)

KINGDOM OF THAILAND
CHOKCHAI KHATKHAJORN
โชคชัย ขัดขจร
สย. 4522
REGISTERED PROFESSIONAL ENGINEER

DYNAMIC ENGINEERING CONSULTANT CO., LTD.	Job No.	193018
Design Reinforced Concrete Beam	Rev.	1
(Ultimate Stress Design method in accordance with ACI 318-89)	Initial	CKJ
Beam No. DB-8A	Date	13-Aug-20
Project : อาคารทิศตะวันออก	File	Beam DB

	fc'	=	350	[kg/cm^2]
	fy SD	=	4000	[kg/cm^2]
	fy SR	=	2400	[kg/cm^2]
$M_{-pos.}$	Mu^+	=	47079	[kg-m]
$M_{-neg.}$	Mu^-	=	23500	[kg-m]
$V_{max.}$	Vu	=	26276	[kg]
	DL	=	2640	[kg/m]
	LL	=	1190	[kg/m]
Length	Ln	=	670	[cm]
width	b	=	30	[cm]
depth	t	=	70	[cm]
	d'	=	5	[cm]
siding	d''	=	3.5	[cm]

For Positive Moment :

Upper Steel	DB 25
Lower Steel	DB 25
Stirrup Steel	RB 9

d	=	65	[cm]
a try	=	9.7480	[cm]
As	=	21.750	[cm^2]
a	=	**9.7480**	[cm]
ϕ Bend	=	0.90	
ϕ Shea	=	0.85	
k1	=	0.80	
Es	=	2040000	[kg/cm^2]
Ec	=	284553	[kg/cm^2]
n	=	7	
ρ	=	0.0360	
ρ_{max}	=	0.0270	
As	=	52.614	[cm^2]
a	=	23.580	[cm]
Mu	=	100784	[kg-m]
M1	=	0	[kg-m]
As'	=	0.0000	[cm^2]
No. of steel	=	**2**	
As	=	9.82	[cm^2]
Σ As	=	21.750	[cm^2]
No. of steel	=	**5**	
As	=	24.54	[cm^2]

Section OK

Stirrup Design

$0.53\,\phi\,(fc')^{0.5}\,bd$	=	17402	[kg]
L=Ln/2(Vu - ϕ Vc)/Vu	=	146.4	[cm]
S	=	19.011	[cm]

Used Stirrup RB 9 @ 0.175 OK

For Negative Moment :

Upper Steel	DB 25
Lower Steel	DB 25
Stirrup Steel	RB 9

d	=	65	[cm]
a try	=	8.7110	[cm]
As	=	10.857	[cm^2]
a	=	**9.7480**	[cm]
ϕ Bend	=	0.90	
ϕ Shea	=	0.85	
k1	=	1.05	
Es	=	2040000	[kg/cm^2]
Ec	=	284553	[kg/cm^2]
n	=	7	
ρ	=	0.0472	
ρ_{max}	=	0.0354	
As	=	69.056	[cm^2]
a	=	30.949	[cm]
Mu	=	123120	[kg-m]
M1	=	0	[kg-m]
As'	=	0.0000	[cm^2]
No. of steel	=	**2**	
As	=	9.82	[cm^2]
Σ As	=	10.857	[cm^2]
No. of steel	=	**3**	
As	=	14.73	[cm^2]

Section OK

Check Deflection

Δ all	=	1.86	[cm]		
ρ fy	=	50	>	35	[kg/cm^2]
Y'	=	22.2			
I	=	424129	[cm^4]		
Ec	=	284116	[kg/cm^2]		
Δ	=	0.83	[cm] <	Δ all	OK
Δ Time	=	1.36	<	Δ all	OK

KINGDOM OF THAILAND
CHOKCHAI KHATKHAJORN
โชคชัย ขัดขจร
สย. 4522
REGISTERED PROFESSIONAL ENGINEER

DYNAMIC ENGINEERING CONSULTANT CO., LTD.	Job No.	193018
Design Reinforced Concrete Beam	Rev.	1
(Ultimate Stress Design method in accordance with ACI 318-89)	Initial	CKJ
Beam No. DB-8A	Date	13-Aug-20
Project : อาคารทิศตะวันออก	File	Beam DB

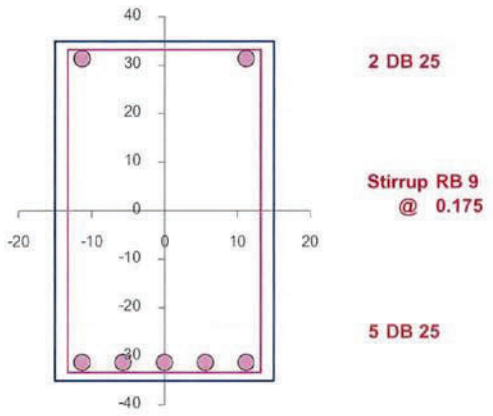

Positive Section

DB-8A (30 X 70)

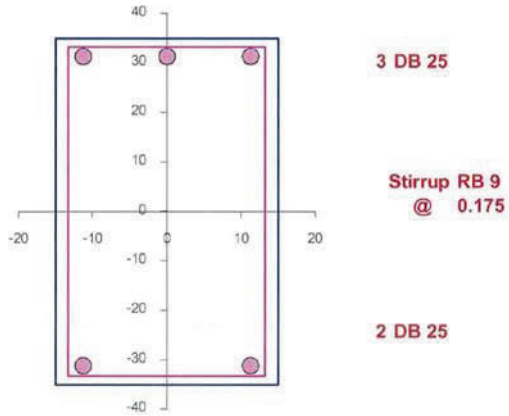

Negative Section

DB-8A (30 X 70)

KINGDOM OF THAILAND
CHOKCHAI KHATKHAJORN
โชคชัย ขัดขจร
สย. 4522
REGISTERED PROFESSIONAL ENGINEER

DYNAMIC ENGINEERING CONSULTANT CO., LTD.

Design Reinforced Concrete Beam

(Ultimate Stress Design method in accordance with ACI 318-89)

Job No.	193018	Beam No.	DB-8B
Rev.	1	Date	13-Aug-20
Initial	CKJ	Project :	อาคารทิศตะวันออก
File	Beam DB		

	fc'	=	350	[kg/cm^2]
	fy SD	=	4000	[kg/cm^2]
	fy SR	=	2400	[kg/cm^2]
$M_{-pos.}$	Mu^+	=	34307	[kg-m]
$M_{-neg.}$	Mu^-	=	17150	[kg-m]
$V_{max.}$	Vu	=	20359	[kg]
	DL	=	2220	[kg/m]
	LL	=	880	[kg/m]
Length	Ln	=	790	[cm]
width	b	=	25	[cm]
depth	t	=	70	[cm]
	d'	=	5	[cm]
siding	d"	=	3.5	[cm]

For Positive Moment :

Upper Steel: DB 25
Lower Steel: DB 25
Stirrup Steel: RB 9

d	=	65	[cm]
a try	=	8.4319	[cm]
As	=	15.678	[cm^2]
a	=	**8.4319**	[cm]
ϕ Bend	=	0.90	
ϕ Shea	=	0.85	
k1	=	0.80	
Es	=	2040000	[kg/cm^2]
Ec	=	284553	[kg/cm^2]
n	=	7	
ρ	=	0.0360	
ρ_{max}	=	0.0270	
As	=	43.845	[cm^2]
a	=	23.580	[cm]
Mu	=	83987	[kg-m]
M1	=	0	[kg-m]
As'	=	0.0000	[cm^2]
No. of steel	=	**2**	
As	=	9.82	[cm^2]
Σ As	=	15.678	[cm^2]
No. of steel	=	**4**	
As	=	19.63	[cm^2]

Section OK

Stirrup Design

$0.53\ \phi\ (fc')^{0.5}\ bd$	=	14501	[kg]
L=Ln/2(Vu - ϕ Vc)/Vu	=	155.9	[cm]
S	=	28.802	[cm]

Used Stirrup RB 9 @ 0.250 OK

For Negative Moment :

Upper Steel: DB 25
Lower Steel: DB 25
Stirrup Steel: RB 9

d	=	65	[cm]
a try	=	8.7110	[cm]
As	=	7.837	[cm^2]
a	=	**8.4319**	[cm]
ϕ Bend	=	0.90	
ϕ Shea	=	0.85	
k1	=	1.05	
Es	=	2040000	[kg/cm^2]
Ec	=	284553	[kg/cm^2]
n	=	7	
ρ	=	0.0472	
ρ_{max}	=	0.0354	
As	=	57.546	[cm^2]
a	=	30.949	[cm]
Mu	=	102600	[kg-m]
M1	=	0	[kg-m]
As'	=	0.0000	[cm^2]
No. of steel	=	**2**	
As	=	9.82	[cm^2]
Σ As	=	7.837	[cm^2]
No. of steel	=	**2**	
As	=	9.82	[cm^2]

Section OK

Check Deflection

Δ all	=	2.19	[cm]		
ρ fy	=	48	>	35	[kg/cm^2]
Y'	=	21.8			
I	=	342840	[cm^4]		
Ec	=	284116	[kg/cm^2]		
Δ	=	1.61	[cm] <	Δ all	OK
Δ Time	=	1.07	<	Δ all	OK

KINGDOM OF THAILAND
CHOKCHAI KHATKHAJORN
โชคชัย ขัดขจร
สย. 4522
REGISTERED PROFESSIONAL ENGINEER

DYNAMIC ENGINEERING CONSULTANT CO., LTD.	Job No.	193018
Design Reinforced Concrete Beam	Rev.	1
(Ultimate Stress Design method in accordance with ACI 318-89)	Initial	CKJ
Beam No. DB-8B	Date	13-Aug-20
Project : อาคารทิศตะวันออก	File	Beam DB

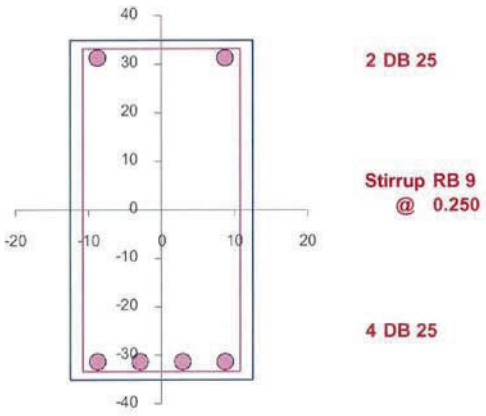

Positive Section
DB-8B (25 X 70)

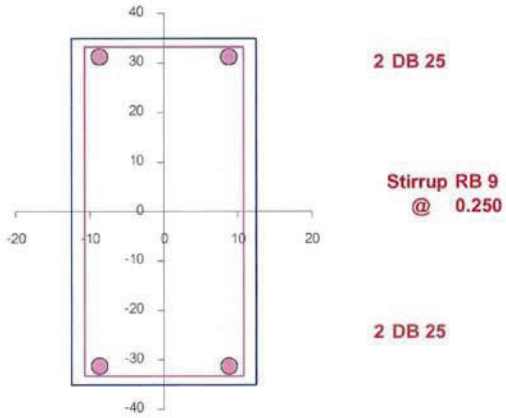

Negative Section
DB-8B (25 X 70)

KINGDOM OF THAILAND
CHOKCHAI KHATKHAJORN
โชคชัย ขัดขจร
สย. 4522
REGISTERED PROFESSIONAL ENGINEER

DYNAMIC ENGINEERING CONSULTANT CO., LTD.

RC-I EXCEL — Ultimate Stress Design method in accordance with ACI 318-89

Design Reinforced Concrete Beam

Project	อาคารทิศตะวันออก โซน ซี	Beam Code	DB-9
Engineer	CKJ	File Name	Beam
		Date	7 Aug 20

	fc'	=	350	[kg/cm²]
	fy SD	=	4000	[kg/cm²]
	fy SD	=	4000	[kg/cm²]
$M_{-pos.}$	Mu^+	=	84000	[kg-m]
$M_{-neg.}$	Mu^-	=	84000	[kg-m]
$V_{max.}$	Vu	=	45626	[kg]
	DL	=	4250	[kg/m]
	LL	=	5750	[kg/m]
Length	Ln	=	760	[cm]
width	b	=	35	[cm]
depth	t	=	90	[cm]
	d'	=	5	[cm]
siding	d"	=	3.5	[cm]

For Positive Moment :

Upper Steel: DB28
Lower Steel: DB28
Stirrup Steel: DB12

d	=	85	[cm]
a try	=	11.2954	[cm]
As	=	29.405	[cm²]
a	=	**11.2959**	[cm]
ϕ Bend	=	0.90	
ϕ Shea	=	0.85	
k1	=	0.80	
Es	=	2040000	[kg/cm²]
Ec	=	284553	[kg/cm²]
n	=	7	
ρ	=	0.0360	
ρ_{max}	=	0.0270	
As	=	80.270	[cm²]
a	=	30.836	[cm]
Mu	=	201072	[kg-m]
M1	=	0	[kg-m]
As'	=	0.0000	[cm²]
No. of steel	=	**2**	
As	=	12.32	[cm²]
Σ As	=	29.405	[cm²]
No. of steel	=	**5**	
As	=	30.79	[cm²]

Section OK

For Negative Moment :

Upper Steel: DB28
Lower Steel: DB28
Stirrup Steel: DB12

d	=	85	[cm]
a try	=	8.7110	[cm]
As	=	28.934	[cm²]
a	=	**11.1149**	[cm]
ϕ Bend	=	0.90	
ϕ Shea	=	0.85	
k1	=	1.05	
Es	=	2040000	[kg/cm²]
Ec	=	284553	[kg/cm²]
n	=	7	
ρ	=	0.0472	
ρ_{max}	=	0.0354	
As	=	105.354	[cm²]
a	=	40.472	[cm]
Mu	=	245633	[kg-m]
M1	=	0	[kg-m]
As'	=	0.0000	[cm²]
No. of steel	=	**2**	
As	=	12.32	[cm²]
Σ As	=	28.934	[cm²]
No. of steel	=	**5**	
As	=	30.79	[cm²]

Section OK

Stirrup Design

$0.53\,\phi\,(fc')^{0.5}\,bd$	=	26548	[kg]
L=Ln/2(Vu - ϕ Vc)/Vu	=	192.1	[cm]
S	=	34.266	[cm]

Used Stirrup 1 DB12 @ 0.300 OK

Check Deflection

Δ all	=	2.11	[cm]	
ρ fy	=	41	> 35	[kg/cm²]
Y'	=	26.8		
I	=	954564	[cm⁴]	
Ec	=	284116	[kg/cm²]	
Δ	=	1.60	[cm] <	Δ all OK
Δ Time	=	2.1	<	Δ all OK

KINGDOM OF THAILAND
CHOKCHAI KHATKHAJORN
โชคชัย ขัดขจร
สย. 4522
REGISTERED PROFESSIONAL ENGINEER

DYNAMIC ENGINEERING CONSULTANT CO., LTD.

RC-I EXCEL — Ultimate Stress Design method in accordance with ACI 318-89

Design Reinforced Concrete Beam

Project	อาคารทิศตะวันออก โซน ซี	Beam Code	DB-9
Engineer	CKJ	File Name	Beam
		Date	7 Aug 20

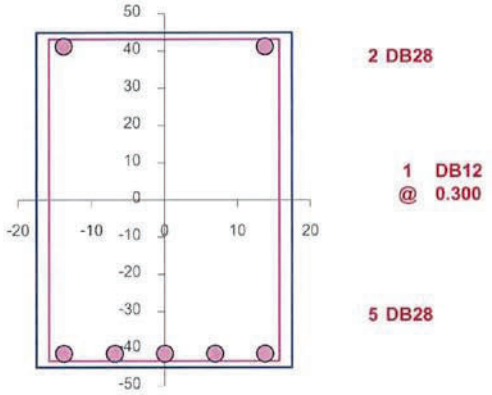

Positive Section
DB-9 (35 X 90)

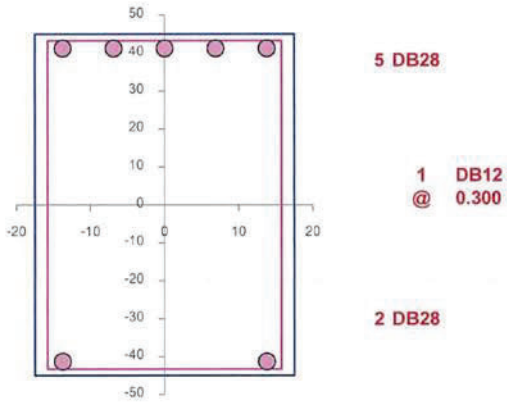

Negative Section
DB-9 (35 X 90)

KINGDOM OF THAILAND
CHOKCHAI KHATKHAJORN
โชคชัย ขัดขจร
สย. 4522
REGISTERED PROFESSIONAL ENGINEER

DYNAMIC ENGINEERING CONSULTANT CO., LTD.

Design Reinforced Concrete Beam
(Ultimate Stress Design method in accordance with ACI 318-89)

Job No.	193018		
Rev.	1		
Initial	CKJ		
Beam No.	DB-10	Date	13-Aug-20
Project :	อาคารทิศตะวันออก	File	Beam DB

	fc'	=	350	[kg/cm^2]
	fy SD	=	4000	[kg/cm^2]
	fy SR	=	2400	[kg/cm^2]
$M_{-pos.}$	Mu^+	=	74808	[kg-m]
$M_{-neg.}$	Mu^-	=	0	[kg-m]
$V_{max.}$	Vu	=	36350	[kg]
	DL	=	3300	[kg/m]
	LL	=	3950	[kg/m]
Length	Ln	=	790	[cm]
width	b	=	40	[cm]
depth	t	=	80	[cm]
	d'	=	5	[cm]
siding	d''	=	3.5	[cm]

For Positive Moment :

Upper Steel	DB 25
Lower Steel	DB 25
Stirrup Steel	RB 9

d	=	75	[cm]
a try	=	9.9762	[cm]
As	=	29.681	[cm^2]
a	=	**9.9767**	[cm]
ϕ Bend	=	0.90	
ϕ Shea	=	0.85	
k1	=	0.80	
Es	=	2040000	[kg/cm^2]
Ec	=	284553	[kg/cm^2]
n	=	7	
ρ	=	0.0360	
ρ_{max}	=	0.0270	
As	=	80.944	[cm^2]
a	=	27.208	[cm]
Mu	=	178907	[kg-m]
M1	=	0	[kg-m]
As'	=	0.0000	[cm^2]
No. of steel	=	**2**	
As	=	9.82	[cm^2]
Σ As	=	29.681	[cm^2]
No. of steel	=	**7**	
As	=	34.36	[cm^2]

Section OK

Stirrup Design

$0.53\,\phi\,(fc')^{0.5}\,bd$	=	26772	[kg]
L=Ln/2(Vu - ϕ Vc)/Vu	=	147.7	[cm]
S	=	20.324	[cm]

Used Stirrup RB 9 @ 0.200 OK

For Negative Moment :

Upper Steel	DB 25
Lower Steel	DB 25
Stirrup Steel	RB 9

d	=	75	[cm]
a try	=	8.7110	[cm]
As	=	0.000	[cm^2]
a	=	**9.9767**	[cm]
ϕ Bend	=	0.90	
ϕ Shea	=	0.85	
k1	=	1.05	
Es	=	2040000	[kg/cm^2]
Ec	=	284553	[kg/cm^2]
n	=	7	
ρ	=	0.0472	
ρ_{max}	=	0.0354	
As	=	106.239	[cm^2]
a	=	35.711	[cm]
Mu	=	218556	[kg-m]
M1	=	0	[kg-m]
As'	=	0.0000	[cm^2]
No. of steel	=	**2**	
As	=	9.82	[cm^2]
Σ As	=	0.000	[cm^2]
No. of steel	=	**2**	
As	=	9.82	[cm^2]

Section OK

Check Deflection

Δ all	=	2.19	[cm]		
ρ fy	=	46	>	35	[kg/cm^2]
Y'	=	24.6			
I	=	809472	[cm^4]		
Ec	=	284116	[kg/cm^2]		
Δ	=	1.60	[cm] <	Δ all	OK
Δ Time	=	2.15	<	Δ all	OK

KINGDOM OF THAILAND
CHOKCHAI KHATKHAJORN
โชคชัย ขัดขจร
สย. 4522
REGISTERED PROFESSIONAL ENGINEER

DYNAMIC ENGINEERING CONSULTANT CO., LTD.		Job No.	193018
Design Reinforced Concrete Beam		Rev.	1
(Ultimate Stress Design method in accordance with ACI 318-89)		Initial	CKJ
Beam No.	DB-10	Date	13-Aug-20
Project :	อาคารทิศตะวันออก	File	Beam DB

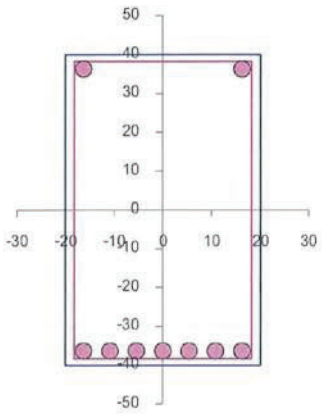

Positive Section

DB-10 (40 X 80)

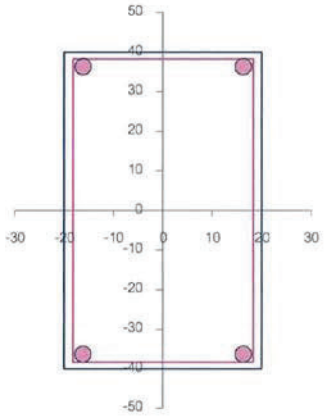

Negative Section

DB-10 (40 X 80)

KINGDOM OF THAILAND
CHOKCHAI KHATKHAJORN
โชคชัย ขัดขจร
สย. 4522
REGISTERED PROFESSIONAL ENGINEER

DYNAMIC ENGINEERING CONSULTANT CO., LTD.	Job No.	193018
Design Reinforced Concrete Beam	Rev.	1
(Ultimate Stress Design method in accordance with ACI 318-89)	Initial	CKJ
Beam No. DB-10A	Date	13-Aug-20
Project : อาคารทิศตะวันออก	File	Beam DB

	fc'	=	350	[kg/cm^2]
	fy SD	=	4000	[kg/cm^2]
	fy SR	=	2400	[kg/cm^2]
$M_{-pos.}$	Mu^+	=	37293	[kg-m]
$M_{-neg.}$	Mu^-	=	0	[kg-m]
$V_{max.}$	Vu	=	22260	[kg]
	DL	=	4000	[kg/m]
	LL	=	2600	[kg/m]
Length	Ln	=	620	[cm]
width	b	=	30	[cm]
depth	t	=	70	[cm]
	d'	=	5	[cm]
siding	d"	=	3.5	[cm]

For Positive Moment :

Upper Steel: DB 25
Lower Steel: DB 25
Stirrup Steel: RB 9

d	=	65	[cm]
a try	=	7.5853	[cm]
As	=	16.925	[cm^2]
a	=	**7.5853**	[cm]
ϕ Bend	=	0.90	
ϕ Shea	=	0.85	
k1	=	0.80	
Es	=	2040000	[kg/cm^2]
Ec	=	284553	[kg/cm^2]
n	=	7	
ρ	=	0.0360	
ρ_{max}	=	0.0270	
As	=	52.614	[cm^2]
a	=	23.580	[cm]
Mu	=	100784	[kg-m]
M1	=	0	[kg-m]
As'	=	0.0000	[cm^2]
No. of steel	=	**2**	
As	=	9.82	[cm^2]
Σ As	=	16.925	[cm^2]
No. of steel	=	**4**	
As	=	19.63	[cm^2]

Section OK

Stirrup Design

$0.53\,\phi\,(fc')^{0.5}\,bd$	=	17402	[kg]
L=Ln/2(Vu - ϕ Vc)/Vu	=	104.0	[cm]
S	=	32.500	[cm]

Used Stirrup RB 9 @ 0.300 OK

For Negative Moment :

Upper Steel: DB 25
Lower Steel: DB 25
Stirrup Steel: RB 9

d	=	65	[cm]
a try	=	8.7110	[cm]
As	=	0.000	[cm^2]
a	=	**7.5853**	[cm]
ϕ Bend	=	0.90	
ϕ Shea	=	0.85	
k1	=	1.05	
Es	=	2040000	[kg/cm^2]
Ec	=	284553	[kg/cm^2]
n	=	7	
ρ	=	0.0472	
ρ_{max}	=	0.0354	
As	=	69.056	[cm^2]
a	=	30.949	[cm]
Mu	=	123120	[kg-m]
M1	=	0	[kg-m]
As'	=	0.0000	[cm^2]
No. of steel	=	**2**	
As	=	9.82	[cm^2]
Σ As	=	0.000	[cm^2]
No. of steel	=	**2**	
As	=	9.82	[cm^2]

Section OK

Check Deflection

Δ all	=	1.72	[cm]		
ρ fy	=	40	>	35	[kg/cm^2]
Y'	=	20.2			
I	=	358279	[cm^4]		
Ec	=	284116	[kg/cm^2]		
Δ	=	1.25	[cm] <	Δ all	OK
Δ Time	=	0.76	<	Δ all	OK

KINGDOM OF THAILAND
CHOKCHAI KHATKHAJORN
โชคชัย ขัตขจร
สย. 4522
REGISTERED PROFESSIONAL ENGINEER

DYNAMIC ENGINEERING CONSULTANT CO., LTD.		Job No.	193018
Design Reinforced Concrete Beam		Rev.	1
(Ultimate Stress Design method in accordance with ACI 318-89)		Initial	CKJ
Beam No.	DB-10A	Date	13-Aug-20
Project :	อาคารทิศตะวันออก	File	Beam DB

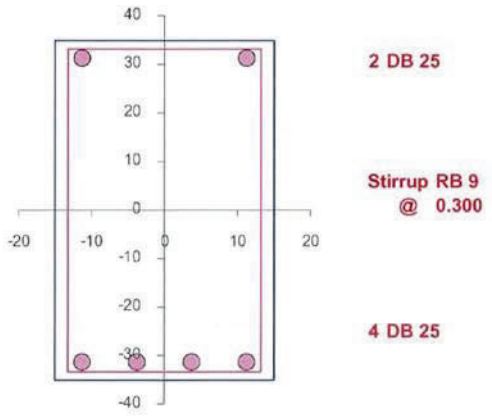

Positive Section

DB-10A (30 X 70)

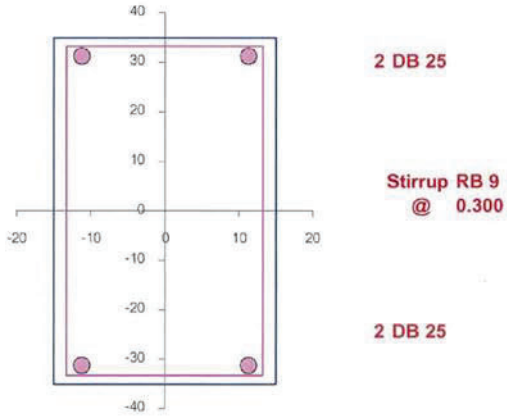

Negative Section

DB-10A (30 X 70)

KINGDOM OF THAILAND
CHOKCHAI KHATKHAJORN
โชคชัย ขัดขจร
สย. 4522
REGISTERED PROFESSIONAL ENGINEER

DYNAMIC ENGINEERING CONSULTANT CO., LTD.

Design Reinforced Concrete Beam
(Ultimate Stress Design method in accordance with ACI 318-89)

Job No.	193018	Beam No.	DB-10B
Rev.	1	Project :	อาคารทิศตะวันออก
Initial	CKJ		
Date	13-Aug-20		
File	Beam DB		

	fc'	=	350	[kg/cm^2]
	fy SD	=	4000	[kg/cm^2]
	fy SR	=	2400	[kg/cm^2]
$M_{+pos.}$	Mu^+	=	5205	[kg-m]
$M_{-neg.}$	Mu^-	=	0	[kg-m]
$V_{max.}$	Vu	=	8330	[kg]
	DL	=	3260	[kg/m]
	LL	=	3400	[kg/m]
Length	Ln	=	250	[cm]
width	b	=	20	[cm]
depth	t	=	50	[cm]
	d'	=	5	[cm]
siding	d''	=	3.5	[cm]

For Positive Moment :

Upper Steel	DB 20
Lower Steel	DB 20
Stirrup Steel	RB 9

	d	=	45	[cm]
	a try	=	2.2144	[cm]
	As	=	3.294	[cm^2]
	a	=	**2.2145**	[cm]
	ϕ Bend	=	0.90	
	ϕ Shea	=	0.85	
	k1	=	0.80	
	Es	=	2040000	[kg/cm^2]
	Ec	=	284553	[kg/cm^2]
	n	=	7	
	ρ	=	0.0360	
	ρ_{max}	=	0.0270	
	As	=	24.283	[cm^2]
	a	=	16.325	[cm]
	Mu	=	32203	[kg-m]
	M1	=	0	[kg-m]
	As'	=	0.0000	[cm^2]
No. of steel		=	**2**	
	As	=	6.28	[cm^2]
	Σ As	=	3.294	[cm^2]
No. of steel		=	**2**	
	As	=	6.28	[cm^2]

Section OK

Stirrup Design

0.53 ϕ (fc')$^{0.5}$ bd	=	8031	[kg]	
L=Ln/2(Vu - ϕ Vc)/Vu	=	22.6	[cm]	
S	=	22.500	[cm]	
Used Stirrup		**RB 9 @ 0.225**		**OK**

For Negative Moment :

Upper Steel	DB 20
Lower Steel	DB 20
Stirrup Steel	RB 9

	d	=	45	[cm]
	a try	=	8.7110	[cm]
	As	=	0.000	[cm^2]
	a	=	**2.2145**	[cm]
	ϕ Bend	=	0.90	
	ϕ Shea	=	0.85	
	k1	=	1.05	
	Es	=	2040000	[kg/cm^2]
	Ec	=	284553	[kg/cm^2]
	n	=	7	
	ρ	=	0.0472	
	ρ_{max}	=	0.0354	
	As	=	31.872	[cm^2]
	a	=	21.426	[cm]
	Mu	=	39340	[kg-m]
	M1	=	0	[kg-m]
	As'	=	0.0000	[cm^2]
No. of steel		=	**2**	
	As	=	6.28	[cm^2]
	Σ As	=	0.000	[cm^2]
No. of steel		=	**2**	
	As	=	6.28	[cm^2]

Section OK

Check Deflection

Δ all	=	0.69	[cm]		
ρ fy	=	28	<	35	[kg/cm^2]
Y'	=	12			
I	=	151875	[cm^4]		
Ec	=	284116	[kg/cm^2]		
Δ	=	0.08	[cm] <	Δ all	**OK**
Δ Time	=	0.04	<	Δ all	**OK**

KINGDOM OF THAILAND
CHOKCHAI KHATKHAJORN
โชคชัย ขัดขจร
สย. 4522
REGISTERED PROFESSIONAL ENGINEER

DYNAMIC ENGINEERING CONSULTANT CO., LTD.	Job No.	193018
Design Reinforced Concrete Beam	Rev.	1
(Ultimate Stress Design method in accordance with ACI 318-89)	Initial	CKJ
Beam No. DB-10B	Date	13-Aug-20
Project : อาคารทิศตะวันออก	File	Beam DB

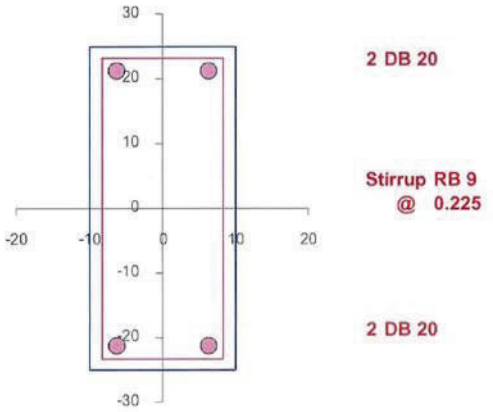

Positive Section
DB-10B (20 X 50)

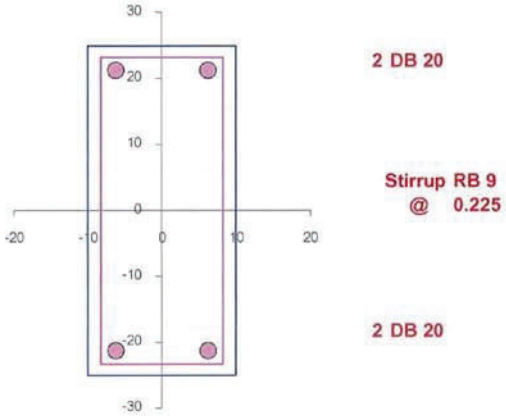

Negative Section
DB-10B (20 X 50)

KINGDOM OF THAILAND
CHOKCHAI KHATKHAJORN
โชคชัย ขัดขจร
สย. 4522
REGISTERED PROFESSIONAL ENGINEER

DYNAMIC ENGINEERING CONSULTANT CO., LTD.

RC-I EXCEL — Ultimate Stress Design method in accordance with ACI 318-89

Design Reinforced Concrete Beam

Project	อาคารทิศตะวันออก โซน ซี	Beam Code	DB-11
Engineer	CKJ	File Name	Beam
		Date	7 Aug 20

	fc'	=	350	[kg/cm²]
	fy SD	=	4000	[kg/cm²]
	fy SD	=	4000	[kg/cm²]
$M_{-pos.}$	Mu^{+}	=	88535	[kg-m]
$M_{-neg.}$	Mu^{-}	=	32000	[kg-m]
$V_{max.}$	Vu	=	56448	[kg]
	DL	=	3970	[kg/m]
	LL	=	4930	[kg/m]
Length	Ln	=	630	[cm]
width	b	=	40	[cm]
depth	t	=	70	[cm]
	d'	=	5	[cm]
siding	d"	=	3.5	[cm]

For Positive Moment :

Upper Steel	DB28
Lower Steel	DB28
Stirrup Steel	DB12

d	=	65	[cm]
a try	=	14.2882	[cm]
As	=	42.507	[cm²]
a	=	**14.2882**	[cm]
ϕ Bend	=	0.90	
ϕ Shea	=	0.85	
k1	=	0.80	
Es	=	2040000	[kg/cm²]
Ec	=	284553	[kg/cm²]
n	=	7	
ρ	=	0.0360	
ρ_{max}	=	0.0270	
As	=	70.152	[cm²]
a	=	23.580	[cm]
Mu	=	134379	[kg-m]
M1	=	0	[kg-m]
As'	=	0.0000	[cm²]
No. of steel	=	**2**	
As	=	12.32	[cm²]
Σ As	=	42.507	[cm²]
No. of steel	=	**7**	
As	=	43.10	[cm²]

Section OK

For Negative Moment :

Upper Steel	DB28
Lower Steel	DB28
Stirrup Steel	DB12

d	=	65	[cm]
a try	=	8.7110	[cm]
As	=	14.657	[cm²]
a	=	**4.9268**	[cm]
ϕ Bend	=	0.90	
ϕ Shea	=	0.85	
k1	=	1.05	
Es	=	2040000	[kg/cm²]
Ec	=	284553	[kg/cm²]
n	=	7	
ρ	=	0.0472	
ρ_{max}	=	0.0354	
As	=	92.074	[cm²]
a	=	30.949	[cm]
Mu	=	164160	[kg-m]
M1	=	0	[kg-m]
As'	=	0.0000	[cm²]
No. of steel	=	**2**	
As	=	12.32	[cm²]
Σ As	=	14.657	[cm²]
No. of steel	=	**3**	
As	=	18.47	[cm²]

Section OK

Stirrup Design

$0.53\,\phi\,(fc')^{0.5}\,bd$	=	23202	[kg]
L=Ln/2(Vu - ϕ Vc)/Vu	=	204.9	[cm]
S	=	30.072	[cm]

Used Stirrup 2 | DB12 @ 0.300 | OK

Check Deflection

Δ all	=	1.75 [cm]			
ρ fy	=	66	>	35	[kg/cm²]
Y'	=	24.7			
I	=	690940	[cm⁴]		
Ec	=	284116	[kg/cm²]		
Δ	=	0.93 [cm]	<	Δ all	OK
Δ Time	=	1.24	<	Δ all	OK

DYNAMIC ENGINEERING CONSULTANT CO., LTD.

RC-I EXCEL — Ultimate Stress Design method in accordance with ACI 318-89

Design Reinforced Concrete Beam

Project	อาคารทิศตะวันออก โซน ซี	Beam Code	DB-11
Engineer	CKJ	File Name	Beam
		Date	7 Aug 20

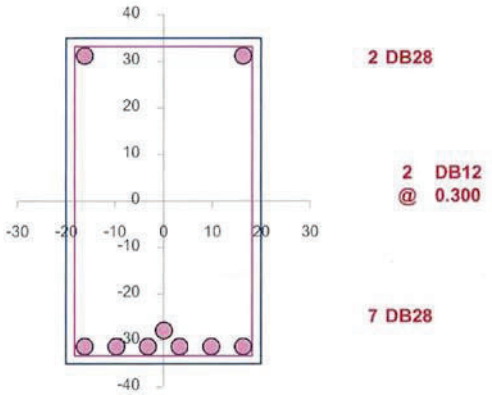

Positive Section
DB-11 (40 X 70)

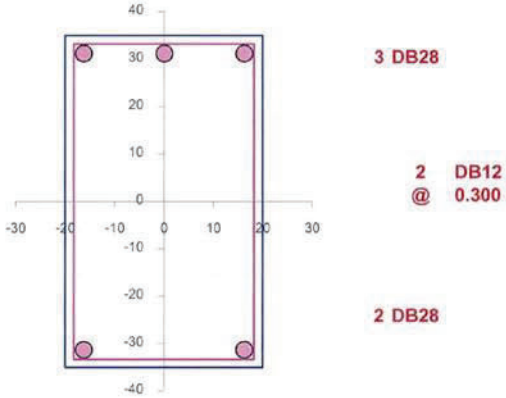

Negative Section
DB-11 (40 X 70)

KINGDOM OF THAILAND
CHOKCHAI KHATKHAJORN
โชคชัย ขัดขจร
สย. 4522
REGISTERED PROFESSIONAL ENGINEER

DYNAMIC ENGINEERING CONSULTANT CO., LTD.

RC-I EXCEL — **Ultimate Stress Design method in accordance with ACI 318-89**

Design Reinforced Concrete Beam

Project	อาคารทิศตะวันออก โซน ซี	**Beam Code**	DB-12
Engineer	CKJ	**File Name**	Beam
		Date	7 Aug 20

	fc'	=	350	[kg/cm^2]
	fy SD	=	4000	[kg/cm^2]
	fy SD	=	4000	[kg/cm^2]
$M_{-pos.}$	Mu^+	=	153934	[kg-m]
$M_{-neg.}$	Mu^-	=	75000	[kg-m]
$V_{max.}$	Vu	=	82064	[kg]
	DL	=	5950	[kg/m]
	LL	=	2150	[kg/m]
Length	Ln	=	700	[cm]
width	b	=	120	[cm]
depth	t	=	80	[cm]
	d'	=	5	[cm]
siding	d''	=	3.5	[cm]

For Positive Moment :

Upper Steel	DB28
Lower Steel	DB28
Stirrup Steel	DB12

	d	=	75	[cm]
	a try	=	6.6860	[cm]
	As	=	59.672	[cm^2]
	a	=	**6.6860**	[cm]
	ϕ Bend	=	0.90	
	ϕ Shea	=	0.85	
	k1	=	0.80	
	Es	=	2040000	[kg/cm^2]
	Ec	=	284553	[kg/cm^2]
	n	=	7	
	ρ	=	0.0360	
	ρ_{max}	=	0.0270	
	As	=	242.833	[cm^2]
	a	=	27.208	[cm]
	Mu	=	536722	[kg-m]
	M1	=	0	[kg-m]
	As'	=	0.0000	[cm^2]
No. of steel		=	**2**	
	As	=	12.32	[cm^2]
	Σ As	=	59.672	[cm^2]
No. of steel		=	**10**	
	As	=	61.58	[cm^2]

Section OK

For Negative Moment :

Upper Steel	DB28
Lower Steel	DB28
Stirrup Steel	DB12

	d	=	75	[cm]
	a try	=	8.7110	[cm]
	As	=	29.490	[cm^2]
	a	=	**3.3042**	[cm]
	ϕ Bend	=	0.90	
	ϕ Shea	=	0.85	
	k1	=	1.05	
	Es	=	2040000	[kg/cm^2]
	Ec	=	284553	[kg/cm^2]
	n	=	7	
	ρ	=	0.0472	
	ρ_{max}	=	0.0354	
	As	=	318.718	[cm^2]
	a	=	35.711	[cm]
	Mu	=	655669	[kg-m]
	M1	=	0	[kg-m]
	As'	=	0.0000	[cm^2]
No. of steel		=	**2**	
	As	=	12.32	[cm^2]
	Σ As	=	29.490	[cm^2]
No. of steel		=	**5**	
	As	=	30.79	[cm^2]

Section OK

Stirrup Design

$0.53\ \phi\ (fc')^{0.5}$ bd	=	80315	[kg]	
L=Ln/2(Vu - ϕ Vc)/Vu	=	58.8	[cm]	
S	=	37.500	[cm]	
Used Stirrup	2	DB12 @ 0.360		OK

Check Deflection

Δ all	=	1.94	[cm]		
ρ fy	=	27	<	35	[kg/cm^2]
Y'	=	19.9			
I	=	4218750	[cm^4]		
Ec	=	284116	[kg/cm^2]		
Δ	=	0.21 [cm]	<	Δ all	OK
Δ Time	=	0.36	<	Δ all	OK

DYNAMIC ENGINEERING CONSULTANT CO., LTD.

RC-I EXCEL — Ultimate Stress Design method in accordance with ACI 318-89

Design Reinforced Concrete Beam		Beam Code	DB-12
Project	อาคารทิศตะวันออก โซน ซี	File Name	Beam
Engineer	CKJ	Date	7 Aug 20

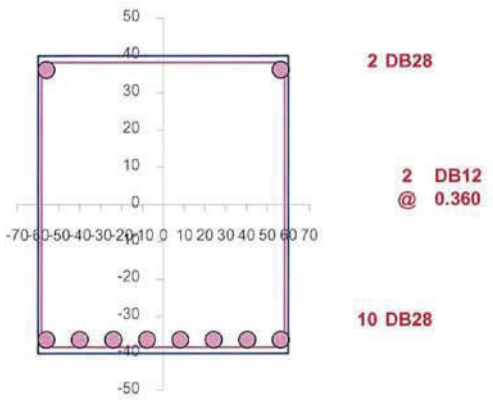

Positive Section
DB-12 (120 X 80)

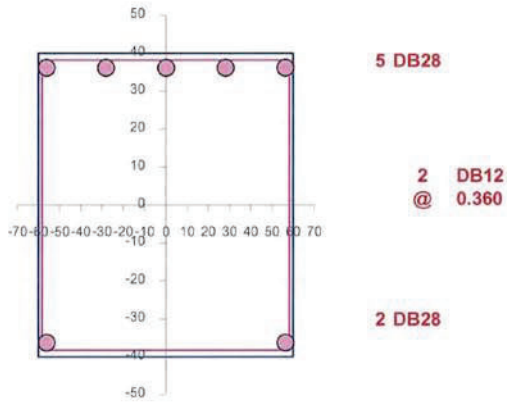

Negative Section
DB-12 (120 X 80)

KINGDOM OF THAILAND
CHOKCHAI KHATKHAJORN
โชคชัย ขัตขจร
สย. 4522
REGISTERED PROFESSIONAL ENGINEER

DYNAMIC ENGINEERING CONSULTANT CO., LTD.

RC-I EXCEL — **Ultimate Stress Design method in accordance with ACI 318-89**

Design Reinforced Concrete Beam

Project	อาคารทิศตะวันออก โซน ซี	**Beam Code**	DB-12A
Engineer	CKJ	**File Name**	Beam
		Date	7 Aug 20

	fc'	=	350	[kg/cm^2]
	fy SD	=	4000	[kg/cm^2]
	fy SD	=	4000	[kg/cm^2]
$M_{-pos.}$	Mu^+	=	102385	[kg-m]
$M_{-neg.}$	Mu^-	=	50000	[kg-m]
$V_{max.}$	Vu	=	73885	[kg]
	DL	=	3360	[kg/m]
	LL	=	4250	[kg/m]
Length	Ln	=	840	[cm]
width	b	=	100	[cm]
depth	t	=	80	[cm]
	d'	=	5	[cm]
siding	d"	=	3.5	[cm]

For Positive Moment :

Upper Steel	DB28
Lower Steel	DB28
Stirrup Steel	DB12

	d	=	75 [cm]
	a try	=	5.2845 [cm]
	As	=	39.305 [cm^2]
	a	=	**5.2847** [cm]
	ϕ Bend	=	0.90
	ϕ Shea	=	0.85
	k1	=	0.80
	Es	=	2040000 [kg/cm^2]
	Ec	=	284553 [kg/cm^2]
	n	=	7
	ρ	=	0.0360
	ρ_{max}	=	0.0270
	As	=	202.361 [cm^2]
	a	=	27.208 [cm]
	Mu	=	447268 [kg-m]
	M1	=	0 [kg-m]
	As'	=	0.0000 [cm^2]
No. of steel		=	**2**
	As	=	12.32 [cm^2]
	Σ As	=	39.305 [cm^2]
No. of steel		=	**7**
	As	=	43.10 [cm^2]

Section OK

Stirrup Design

0.53 ϕ (fc')$^{0.5}$ bd	=	66929	[kg]	
L=Ln/2(Vu - ϕ Vc)/Vu	=	96.6	[cm]	
S	=	37.500	[cm]	
Used Stirrup	2	DB12 @ 0.360		OK

For Negative Moment :

Upper Steel	DB28
Lower Steel	DB28
Stirrup Steel	DB12

	d	=	75 [cm]
	a try	=	8.7110 [cm]
	As	=	19.660 [cm^2]
	a	=	**2.6434** [cm]
	ϕ Bend	=	0.90
	ϕ Shea	=	0.85
	k1	=	1.05
	Es	=	2040000 [kg/cm^2]
	Ec	=	284553 [kg/cm^2]
	n	=	7
	ρ	=	0.0472
	ρ_{max}	=	0.0354
	As	=	265.598 [cm^2]
	a	=	35.711 [cm]
	Mu	=	546391 [kg-m]
	M1	=	0 [kg-m]
	As'	=	0.0000 [cm^2]
No. of steel		=	**2**
	As	=	12.32 [cm^2]
	Σ As	=	19.660 [cm^2]
No. of steel		=	**4**
	As	=	24.63 [cm^2]

Section OK

Check Deflection

Δ all	=	2.33 [cm]			
ρ fy	=	23	<	35	[kg/cm^2]
Y'	=	18.5			
I	=	3515625	[cm^4]		
Ec	=	284116	[kg/cm^2]		
Δ	=	0.49 [cm]	<	Δ all	OK
Δ Time	=	0.66	<	Δ all	OK

KINGDOM OF THAILAND
CHOKCHAI KHATKHAJORN
โชคชัย ขัดขจร
สย. 4522
REGISTERED PROFESSIONAL ENGINEER

DYNAMIC ENGINEERING CONSULTANT CO., LTD.

RC-I EXCEL — Ultimate Stress Design method in accordance with ACI 318-89

Design Reinforced Concrete Beam

Project	อาคารทิศตะวันออก โซน ซี	Beam Code	DB-12A
Engineer	CKJ	File Name	Beam
		Date	7 Aug 20

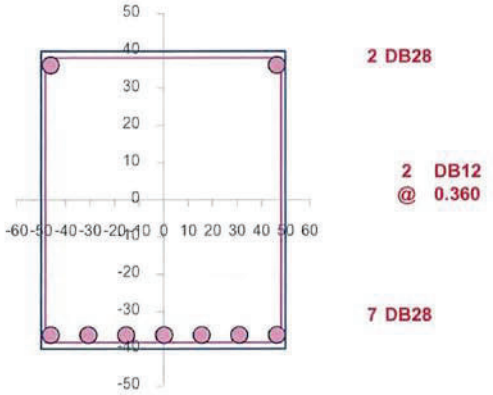

Positive Section
DB-12A (100 X 80)

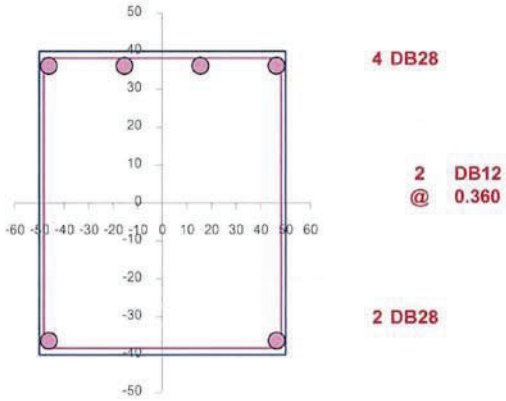

Negative Section
DB-12A (100 X 80)

KINGDOM OF THAILAND
CHOKCHAI KHATKHAJORN
โชคชัย ขัดขจร
สม. 4522
REGISTERED PROFESSIONAL ENGINEER

DYNAMIC ENGINEERING CONSULTANT CO., LTD.

RC-I EXCEL — Ultimate Stress Design method in accordance with ACI 318-89

Design Reinforced Concrete Beam

Project	อาคารทิศตะวันออก โซน ซี	Beam Code	DB-13
Engineer	CKJ	File Name	Beam
		Date	7 Aug 20

	fc'	=	350	[kg/cm^2]
	fy SD	=	4000	[kg/cm^2]
	fy SD	=	4000	[kg/cm^2]
$M_{-pos.}$	Mu^+	=	88630	[kg-m]
$M_{-neg.}$	Mu^-	=	0	[kg-m]
$V_{max.}$	Vu	=	53943	[kg]
	DL	=	4250	[kg/m]
	LL	=	3780	[kg/m]
Length	Ln	=	700	[cm]
width	b	=	30	[cm]
depth	t	=	80	[cm]
	d'	=	5	[cm]
siding	d"	=	3.5	[cm]

For Positive Moment :

Upper Steel: DB28
Lower Steel: DB28
Stirrup Steel: DB12

d	=	75	[cm]
a try	=	16.5344	[cm]
As	=	36.893	[cm^2]
a	=	**16.5345**	[cm]
ϕ Bend	=	0.90	
ϕ Shea	=	0.85	
k1	=	0.80	
Es	=	2040000	[kg/cm^2]
Ec	=	284553	[kg/cm^2]
n	=	7	
ρ	=	0.0360	
$ρ_{max}$	=	0.0270	
As	=	60.708	[cm^2]
a	=	27.208	[cm]
Mu	=	134181	[kg-m]
M1	=	0	[kg-m]
As'	=	0.0000	[cm^2]
No. of steel	=	**2**	
As	=	12.32	[cm^2]
Σ As	=	36.893	[cm^2]
No. of steel	=	**6**	
As	=	36.95	[cm^2]

Section OK

For Negative Moment :

Upper Steel: DB28
Lower Steel: DB28
Stirrup Steel: DB12

d	=	75	[cm]
a try	=	8.7110	[cm]
As	=	0.000	[cm^2]
a	=	**0.0000**	[cm]
ϕ Bend	=	0.90	
ϕ Shea	=	0.85	
k1	=	1.05	
Es	=	2040000	[kg/cm^2]
Ec	=	284553	[kg/cm^2]
n	=	7	
ρ	=	0.0472	
$ρ_{max}$	=	0.0354	
As	=	79.680	[cm^2]
a	=	35.711	[cm]
Mu	=	163917	[kg-m]
M1	=	0	[kg-m]
As'	=	0.0000	[cm^2]
No. of steel	=	**2**	
As	=	12.32	[cm^2]
Σ As	=	0.000	[cm^2]
No. of steel	=	**2**	
As	=	12.32	[cm^2]

Section OK

KINGDOM OF THAILAND
CHOKCHAI KHATKHAJORN
โชคชัย ขัดขจร
สย. 4522
REGISTERED PROFESSIONAL ENGINEER

Stirrup Design

$0.53\ ϕ\ (fc')^{0.5}$ bd	=	20079	[kg]
L=Ln/2(Vu - ϕ Vc)/Vu	=	239.3	[cm]
S	=	34.065	[cm]

Used Stirrup 2 DB12 @ 0.300 OK

Check Deflection

Δ all	=	1.94	[cm]	
ρ fy	=	66	> 35	[kg/cm^2]
Y'	=	28.4		
I	=	790661	[cm^4]	
Ec	=	284116	[kg/cm^2]	
Δ	=	1.12	[cm] <	Δ all OK
Δ Time	=	1.6	<	Δ all OK

DYNAMIC ENGINEERING CONSULTANT CO., LTD.

RC-I EXCEL — Ultimate Stress Design method in accordance with ACI 318-89

Design Reinforced Concrete Beam

Project	อาคารทิศตะวันออก โซน ซี	Beam Code	DB-13
Engineer	CKJ	File Name	Beam
		Date	7 Aug 20

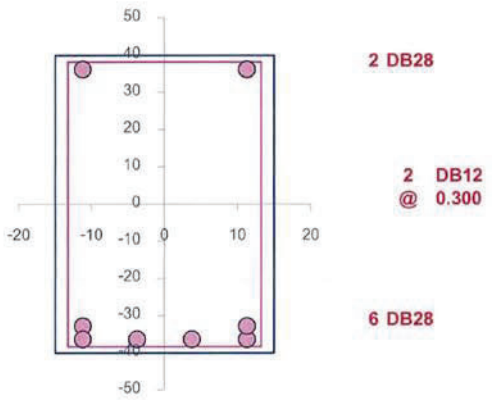

Positive Section
DB-13 (30 X 80)

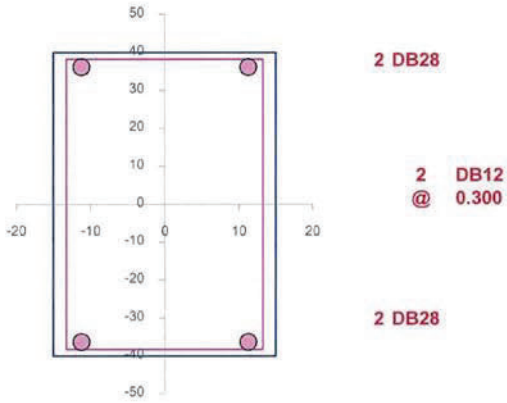

Negative Section
DB-13 (30 X 80)

KINGDOM OF THAILAND
CHOKCHAI KHATKHAJORN
โชคชัย ขัดขจร
สย. 4522
REGISTERED PROFESSIONAL ENGINEER

DYNAMIC ENGINEERING CONSULTANT CO., LTD.		Job No.	193018
Design Reinforced Concrete Beam		Rev.	1
(Ultimate Stress Design method in accordance with ACI 318-89)		Initial	CKJ
Beam No.	DB-13A	Date	13-Aug-20
Project :	อาคารทิศตะวันออก	File	Beam DB

	fc'	=	350	[kg/cm^2]
	fy SD	=	4000	[kg/cm^2]
	fy SR	=	2400	[kg/cm^2]
$M_{+pos.}$	Mu^+	=	26200	[kg-m]
$M_{-neg.}$	Mu^-	=	26200	[kg-m]
$V_{max.}$	Vu	=	9264	[kg]
	DL	=	2500	[kg/m]
	LL	=	4500	[kg/m]
Length	Ln	=	500	[cm]
width	b	=	30	[cm]
depth	t	=	50	[cm]
	d'	=	5	[cm]
siding	d"	=	3.5	[cm]

For Positive Moment :

Upper Steel	DB 25
Lower Steel	DB 25
Stirrup Steel	RB 9

d	=	45	[cm]
a try	=	7.9507	[cm]
As	=	17.740	[cm^2]
a	=	**7.9507**	[cm]
ϕ Bend	=	0.90	
ϕ Shea	=	0.85	
k1	=	0.80	
Es	=	2040000	[kg/cm^2]
Ec	=	284553	[kg/cm^2]
n	=	7	
ρ	=	0.0360	
ρ_{max}	=	0.0270	
As	=	36.425	[cm^2]
a	=	16.325	[cm]
Mu	=	48305	[kg-m]
M1	=	0	[kg-m]
As'	=	0.0000	[cm^2]
No. of steel	=	**2**	
As	=	9.82	[cm^2]
Σ As	=	17.740	[cm^2]
No. of steel	=	**4**	
As	=	19.63	[cm^2]

Section OK

Stirrup Design

$0.53\,\phi\,(fc')^{0.5}\,bd$	=	12047	[kg]
L=Ln/2(Vu - ϕ Vc)/Vu	=	-26.3	[cm]
S	=	-41.967	[cm]
Used Stirrup		RB 9 @ #N/A	#N/A

For Negative Moment :

Upper Steel	DB 25
Lower Steel	DB 25
Stirrup Steel	RB 9

d	=	45	[cm]
a try	=	8.7110	[cm]
As	=	17.740	[cm^2]
a	=	**7.9507**	[cm]
ϕ Bend	=	0.90	
ϕ Shea	=	0.85	
k1	=	1.05	
Es	=	2040000	[kg/cm^2]
Ec	=	284553	[kg/cm^2]
n	=	7	
ρ	=	0.0472	
ρ_{max}	=	0.0354	
As	=	47.808	[cm^2]
a	=	21.426	[cm]
Mu	=	59010	[kg-m]
M1	=	0	[kg-m]
As'	=	0.0000	[cm^2]
No. of steel	=	**2**	
As	=	9.82	[cm^2]
Σ As	=	17.740	[cm^2]
No. of steel	=	**4**	
As	=	19.63	[cm^2]

Section OK

Check Deflection

Δ all	=	1.39	[cm]		
ρ fy	=	58	>	35	[kg/cm^2]
Y'	=	16.2			
I	=	156517	[cm^4]		
Ec	=	284116	[kg/cm^2]		
Δ	=	1.28	[cm] <	Δ all	OK
Δ Time	=	0.63	<	Δ all	OK

KINGDOM OF THAILAND
CHOKCHAI KHATKHAJORN
โชคชัย ขัดขจร
สย. 4522
REGISTERED PROFESSIONAL ENGINEER

DYNAMIC ENGINEERING CONSULTANT CO., LTD.		Job No.	193018
Design Reinforced Concrete Beam		Rev.	1
(Ultimate Stress Design method in accordance with ACI 318-89)		Initial	CKJ
Beam No.	DB-13A	Date	13-Aug-20
Project :	อาคารทิศตะวันออก	File	Beam DB

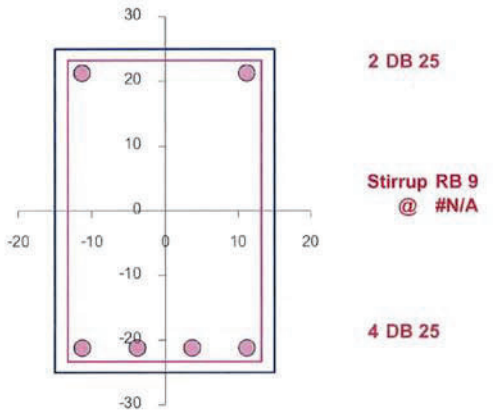

Positive Section

DB-13A (30 X 50)

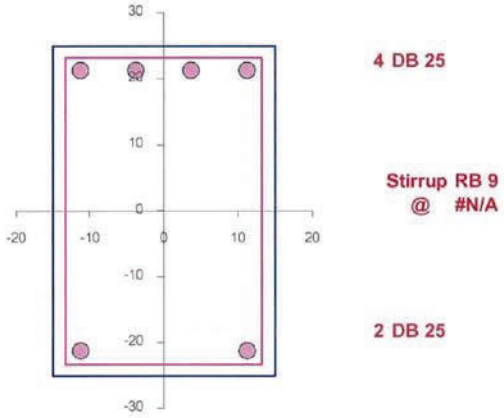

Negative Section

DB-13A (30 X 50)

KINGDOM OF THAILAND
CHOKCHAI KHATKHAJORN
โชคชัย ขัดขจร
สม. 4522
REGISTERED PROFESSIONAL ENGINEER

DYNAMIC ENGINEERING CONSULTANT CO., LTD.

RC-I EXCEL — Ultimate Stress Design method in accordance with ACI 318-89

Design Reinforced Concrete Beam

Project	อาคารทิศตะวันออก โซน ซี	Beam Code	DB-14
Engineer	CKJ	File Name	Beam
		Date	7 Aug 20

	fc'	=	350	[kg/cm^2]
	fy SD	=	4000	[kg/cm^2]
	fy SD	=	4000	[kg/cm^2]
$M_{-pos.}$	Mu^+	=	138689	[kg-m]
$M_{-neg.}$	Mu^-	=	0	[kg-m]
$V_{max.}$	Vu	=	82451	[kg]
	DL	=	5800	[kg/m]
	LL	=	8500	[kg/m]
Length	Ln	=	700	[cm]
width	b	=	40	[cm]
depth	t	=	80	[cm]
	d'	=	5	[cm]
siding	d"	=	3.5	[cm]

For Positive Moment :

Upper Steel	DB28
Lower Steel	DB28
Stirrup Steel	DB12

d	=	75	[cm]
a try	=	19.9082	[cm]
As	=	59.227	[cm^2]
a	=	**19.9082**	[cm]
ϕ Bend	=	0.90	
ϕ Shea	=	0.85	
k1	=	0.80	
Es	=	2040000	[kg/cm^2]
Ec	=	284553	[kg/cm^2]
n	=	7	
ρ	=	0.0360	
ρ_{max}	=	0.0270	
As	=	80.944	[cm^2]
a	=	27.208	[cm]
Mu	=	178907	[kg-m]
M1	=	0	[kg-m]
As'	=	0.0000	[cm^2]
No. of steel	=	**2**	
As	=	12.32	[cm^2]
Σ As	=	59.227	[cm^2]
No. of steel	=	**10**	
As	=	61.58	[cm^2]

Section OK

Stirrup Design

$0.53\,\phi\,(fc')^{0.5}$ bd	=	26772	[kg]	
L=Ln/2(Vu - ϕ Vc)/Vu	=	253.4	[cm]	
S	=	18.750	[cm]	
Used Stirrup	2	DB12 @ 0.175		OK

For Negative Moment :

Upper Steel	DB28
Lower Steel	DB28
Stirrup Steel	DB12

d	=	75	[cm]
a try	=	8.7110	[cm]
As	=	0.000	[cm^2]
a	=	**0.0000**	[cm]
ϕ Bend	=	0.90	
ϕ Shea	=	0.85	
k1	=	1.05	
Es	=	2040000	[kg/cm^2]
Ec	=	284553	[kg/cm^2]
n	=	7	
ρ	=	0.0472	
ρ_{max}	=	0.0354	
As	=	106.239	[cm^2]
a	=	35.711	[cm]
Mu	=	218556	[kg-m]
M1	=	0	[kg-m]
As'	=	0.0000	[cm^2]
No. of steel	=	**2**	
As	=	12.32	[cm^2]
Σ As	=	0.000	[cm^2]
No. of steel	=	**2**	
As	=	12.32	[cm^2]

Section OK

Check Deflection

Δ all	=	1.94	[cm]		
ρ fy	=	82	>	35	[kg/cm^2]
Y'	=	30.8			
I	=	1231642	[cm^4]		
Ec	=	284116	[kg/cm^2]		
Δ	=	1.28	[cm] <	Δ all	OK
Δ Time	=	1.64	<	Δ all	OK

KINGDOM OF THAILAND
CHOKCHAI KHATKHAJORN
โชคชัย ขัดขจร
สย. 4522
REGISTERED PROFESSIONAL ENGINEER

DYNAMIC ENGINEERING CONSULTANT CO., LTD.

RC-I EXCEL — Ultimate Stress Design method in accordance with ACI 318-89

Design Reinforced Concrete Beam		Beam Code	DB-14
Project	อาคารทิศตะวันออก โซน ซี	File Name	Beam
Engineer	CKJ	Date	7 Aug 20

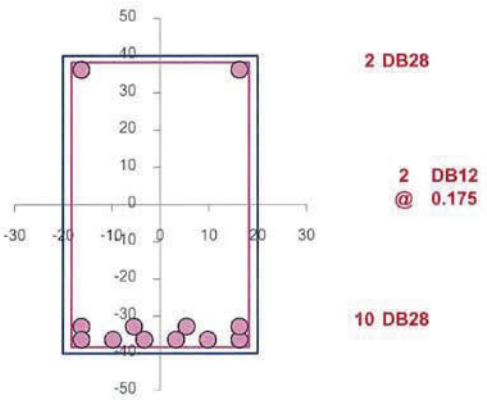

Positive Section
DB-14 (40 X 80)

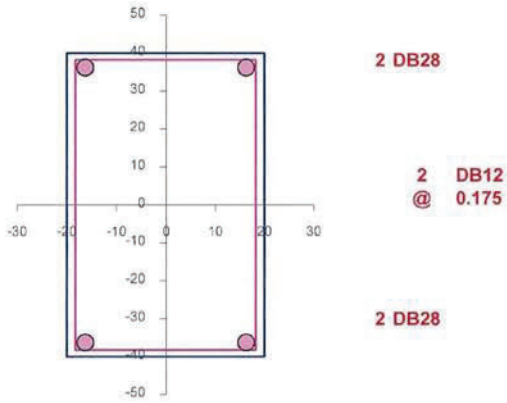

Negative Section
DB-14 (40 X 80)

KINGDOM OF THAILAND
CHOKCHAI KHATKHAJORN
โชคชัย ขัดขจร
สย. 4522
REGISTERED PROFESSIONAL ENGINEER

DYNAMIC ENGINEERING CONSULTANT CO., LTD.

RC-I EXCEL — **Ultimate Stress Design method in accordance with ACI 318-89**

Design Reinforced Concrete Beam

Project	อาคารทิศตะวันออก โซน ซี	**Beam Code**	DB-15
Engineer	CKJ	**File Name**	Beam
		Date	10 Aug 20

	fc'	=	350	[kg/cm^2]
	fy SD	=	4000	[kg/cm^2]
	fy SD	=	4000	[kg/cm^2]
$M_{-pos.}$	Mu^+	=	74811	[kg-m]
$M_{-neg.}$	Mu^-	=	37000	[kg-m]
$V_{max.}$	Vu	=	44512	[kg]
	DL	=	5400	[kg/m]
	LL	=	7650	[kg/m]
Length	Ln	=	630	[cm]
width	b	=	30	[cm]
depth	t	=	80	[cm]
	d'	=	5	[cm]
siding	d"	=	3.5	[cm]

For Positive Moment :

Upper Steel	DB25
Lower Steel	DB25
Stirrup Steel	DB12

	d	=	75 [cm]
	a try	=	13.6625 [cm]
	As	=	30.484 [cm^2]
	a	=	**13.6625** [cm]
	ϕ Bend	=	0.90
	ϕ Shea	=	0.85
	k1	=	0.80
	Es	=	2040000 [kg/cm^2]
	Ec	=	284553 [kg/cm^2]
	n	=	7
	ρ	=	0.0360
	ρ_{max}	=	0.0270
	As	=	60.708 [cm^2]
	a	=	27.208 [cm]
	Mu	=	134181 [kg-m]
	M1	=	0 [kg-m]
	As'	=	0.0000 [cm^2]
No. of steel		=	**2**
	As	=	9.82 [cm^2]
	Σ As	=	30.484 [cm^2]
No. of steel		=	**7**
	As	=	34.36 [cm^2]

Section OK

Stirrup Design

$0.53\ \phi\ (fc')^{0.5}$ bd	=	20079	[kg]	
L=Ln/2(Vu - ϕ Vc)/Vu	=	194.2	[cm]	
S	=	23.607	[cm]	
Used Stirrup	1	DB12 @ 0.225		OK

For Negative Moment :

Upper Steel	DB25
Lower Steel	DB25
Stirrup Steel	DB12

	d	=	75 [cm]
	a try	=	8.7110 [cm]
	As	=	14.549 [cm^2]
	a	=	**6.5204** [cm]
	ϕ Bend	=	0.90
	ϕ Shea	=	0.85
	k1	=	1.05
	Es	=	2040000 [kg/cm^2]
	Ec	=	284553 [kg/cm^2]
	n	=	7
	ρ	=	0.0472
	ρ_{max}	=	0.0354
	As	=	79.680 [cm^2]
	a	=	35.711 [cm]
	Mu	=	163917 [kg-m]
	M1	=	0 [kg-m]
	As'	=	0.0000 [cm^2]
No. of steel		=	**2**
	As	=	9.82 [cm^2]
	Σ As	=	14.549 [cm^2]
No. of steel		=	**3**
	As	=	14.73 [cm^2]

Section OK

Check Deflection

Δ all	=	1.75 [cm]			
ρ fy	=	61	>	35	[kg/cm^2]
Y'	=	27.6			
I	=	750654	[cm^4]		
Ec	=	284116	[kg/cm^2]		
Δ	=	1.26 [cm]	<	Δ all	OK
Δ Time	=	1.63	<	Δ all	OK

KINGDOM OF THAILAND
CHOKCHAI KHATKHAJORN
โชคชัย ขัดขจร
สย. 4522
REGISTERED PROFESSIONAL ENGINEER

DYNAMIC ENGINEERING CONSULTANT CO., LTD.

RC-I EXCEL — Ultimate Stress Design method in accordance with ACI 318-89

Design Reinforced Concrete Beam

Project	อาคารทิศตะวันออก โซน ซี	Beam Code	DB-15
Engineer	CKJ	File Name	Beam
		Date	10 Aug 20

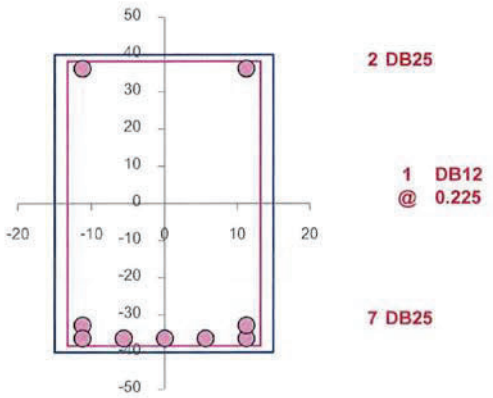

Positive Section
DB-15 (30 X 80)

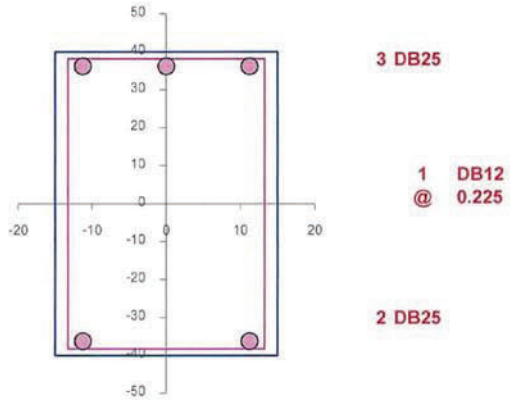

Negative Section
DB-15 (30 X 80)

KINGDOM OF THAILAND
CHOKCHAI KHATKHAJORN
โชคชัย ขัดขจร
สย. 4522
REGISTERED PROFESSIONAL ENGINEER

DYNAMIC ENGINEERING CONSULTANT CO., LTD.

RC-I EXCEL — Ultimate Stress Design method in accordance with ACI 318-89

Design Reinforced Concrete Beam

Project	อาคารทิศตะวันออก โซน ซี	Beam Code	DB-15A
Engineer	CKJ	File Name	Beam
		Date	10 Aug 20

	fc'	=	350	[kg/cm^2]
	fy SD	=	4000	[kg/cm^2]
	fy SD	=	4000	[kg/cm^2]
$M_{-pos.}$	Mu$^+$	=	7437	[kg-m]
$M_{-neg.}$	Mu$^-$	=	7437	[kg-m]
$V_{max.}$	Vu	=	11900	[kg]
	DL	=	4080	[kg/m]
	LL	=	5440	[kg/m]
Length	Ln	=	250	[cm]
width	b	=	30	[cm]
depth	t	=	80	[cm]
	d'	=	5	[cm]
siding	d"	=	3.5	[cm]

For Positive Moment :

Upper Steel: DB25
Lower Steel: DB25
Stirrup Steel: DB12

d	=	75	[cm]
a try	=	1.2443	[cm]
As	=	2.777	[cm^2]
a	=	**1.2448**	[cm]
ϕ Bend	=	0.90	
ϕ Shea	=	0.85	
k1	=	0.80	
Es	=	2040000	[kg/cm^2]
Ec	=	284553	[kg/cm^2]
n	=	7	
ρ	=	0.0360	
ρ_{max}	=	0.0270	
As	=	60.708	[cm^2]
a	=	27.208	[cm]
Mu	=	134181	[kg-m]
M1	=	0	[kg-m]
As'	=	0.0000	[cm^2]
No. of steel	=	**2**	
As	=	9.82	[cm^2]
Σ As	=	2.777	[cm^2]
No. of steel	=	**2**	
As	=	9.82	[cm^2]

Section OK

For Negative Moment :

Upper Steel: DB25
Lower Steel: DB25
Stirrup Steel: DB12

d	=	75	[cm]
a try	=	8.7110	[cm]
As	=	2.924	[cm^2]
a	=	**1.3106**	[cm]
ϕ Bend	=	0.90	
ϕ Shea	=	0.85	
k1	=	1.05	
Es	=	2040000	[kg/cm^2]
Ec	=	284553	[kg/cm^2]
n	=	7	
ρ	=	0.0472	
ρ_{max}	=	0.0354	
As	=	79.680	[cm^2]
a	=	35.711	[cm]
Mu	=	163917	[kg-m]
M1	=	0	[kg-m]
As'	=	0.0000	[cm^2]
No. of steel	=	**2**	
As	=	9.82	[cm^2]
Σ As	=	2.924	[cm^2]
No. of steel	=	**2**	
As	=	9.82	[cm^2]

Section OK

KINGDOM OF THAILAND
CHOKCHAI KHATKHAJORN
โชคชัย ขัดขจร
สย. 4522
REGISTERED PROFESSIONAL ENGINEER

Stirrup Design

0.53 ϕ (fc')$^{0.5}$ bd =	20079	[kg]	
L=Ln/2(Vu - ϕ Vc)/Vu =	-54.3	[cm]	
S =	-70.524	[cm]	
Used Stirrup 1	DB12 @ #N/A		#N/A

Check Deflection

Δ all =	0.69	[cm]		
ρ fy =	17	<	35	[kg/cm^2]
Y' =	16.4			
I =	1054688	[cm^4]		
Ec =	284116	[kg/cm^2]		
Δ =	0.02	[cm] <	Δ all	OK
Δ Time =	0.01	<	Δ all	OK

DYNAMIC ENGINEERING CONSULTANT CO., LTD.

RC-I EXCEL — **Ultimate Stress Design method in accordance with ACI 318-89**

Design Reinforced Concrete Beam

Project	อาคารทิศตะวันออก โซน ซี	Beam Code	DB-15A
Engineer	CKJ	File Name	Beam
		Date	10 Aug 20

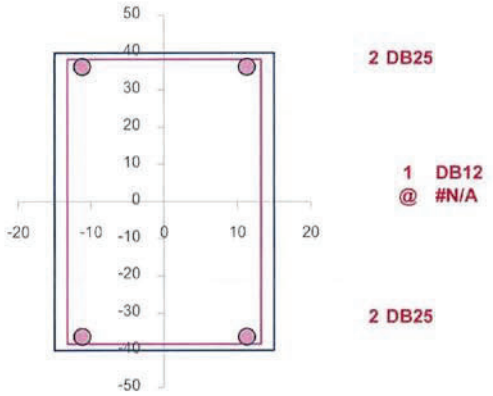

Positive Section
DB-15A (30 X 80)

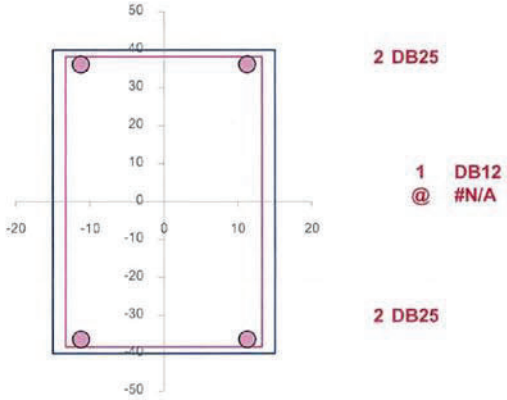

Negative Section
DB-15A (30 X 80)

KINGDOM OF THAILAND
CHOKCHAI KHATKHAJORN
โชคชัย ขัดขจร
สย. 4522
REGISTERED PROFESSIONAL ENGINEER

DYNAMIC ENGINEERING CONSULTANT CO., LTD.

RC-I EXCEL — **Ultimate Stress Design method in accordance with ACI 318**

Design Reinforced Concrete Beam

Project	อาคารทิศตะวันออก โซน ซี	**Beam Code**	BDB-1
Engineer	CKJ	**File Name**	Beam
		Date	12 Nov 20

	fc'	=	350	[kg/cm^2]
	fy SD	=	4000	[kg/cm^2]
	fy SD	=	4000	[kg/cm^2]
$M_{-pos.}$	Mu^+	=	90158	[kg-m]
$M_{-neg.}$	Mu^-	=	90158	[kg-m]
$V_{max.}$	Vu	=	56490	[kg]
	DL	=	5740	[kg/m]
	LL	=	7710	[kg/m]
Length	Ln	=	540	[cm]
width	b	=	300	[cm]
depth	t	=	45	[cm]
	d'	=	5	[cm]
siding	d''	=	3.5	[cm]

For Positive Moment :

Upper Steel	DB25
Lower Steel	DB25
Stirrup Steel	DB12

d	=	40	[cm]
a try	=	2.9120	[cm]
As	=	64.975	[cm^2]
a	=	**2.9120**	[cm]
ϕ Bend	=	0.90	
ϕ Shea	=	0.85	
k1	=	0.80	
Es	=	2040000	[kg/cm^2]
Ec	=	284553	[kg/cm^2]
n	=	7	
ρ	=	0.0360	
ρ_{max}	=	0.0270	
As	=	323.777	[cm^2]
a	=	14.511	[cm]
Mu	=	381669	[kg-m]
M1	=	0	[kg-m]
As'	=	0.0000	[cm^2]
No. of steel	=	**2**	
As	=	9.82	[cm^2]
Σ As	=	64.975	[cm^2]
No. of steel	=	**14**	
As	=	68.72	[cm^2]

Section OK

For Negative Moment :

Upper Steel	DB25
Lower Steel	DB25
Stirrup Steel	DB12

d	=	40	[cm]
a try	=	8.7110	[cm]
As	=	70.260	[cm^2]
a	=	**3.1489**	[cm]
ϕ Bend	=	0.90	
ϕ Shea	=	0.85	
k1	=	1.05	
Es	=	2040000	[kg/cm^2]
Ec	=	284553	[kg/cm^2]
n	=	7	
ρ	=	0.0472	
ρ_{max}	=	0.0354	
As	=	424.958	[cm^2]
a	=	19.046	[cm]
Mu	=	466254	[kg-m]
M1	=	0	[kg-m]
As'	=	0.0000	[cm^2]
No. of steel	=	**2**	
As	=	9.82	[cm^2]
Σ As	=	70.260	[cm^2]
No. of steel	=	**15**	
As	=	73.63	[cm^2]

Section OK

Stirrup Design

$0.53\,\phi\,(fc')^{0.5}\,bd$	=	107086	[kg]
L=Ln/2(Vu - ϕ Vc)/Vu	=	-165.1	[cm]
S	=	-24.320	[cm]

Used Stirrup 4 | DB12 @ #N/A | #N/A

Check Deflection

Δ all	=	1.50	[cm]		
ρ fy	=	23	<	35	[kg/cm^2]
Y'	=	9.84			
I	=	1600000	[cm^4]		
Ec	=	284116	[kg/cm^2]		
Δ	=	0.33 [cm]	<	Δ all	OK
Δ Time	=	0.43	<	Δ all	OK

KINGDOM OF THAILAND
CHOKCHAI KHATKHAJORN
โชคชัย ขัดขจร
สย. 4522
REGISTERED PROFESSIONAL ENGINEER

DYNAMIC ENGINEERING CONSULTANT CO., LTD.

RC-I EXCEL — Ultimate Stress Design method in accordance with ACI 318

Design Reinforced Concrete Beam

Project	อาคารทิศตะวันออก โซน ซี	Beam Code	BDB-1
Engineer	CKJ	File Name	Beam
		Date	12 Nov 20

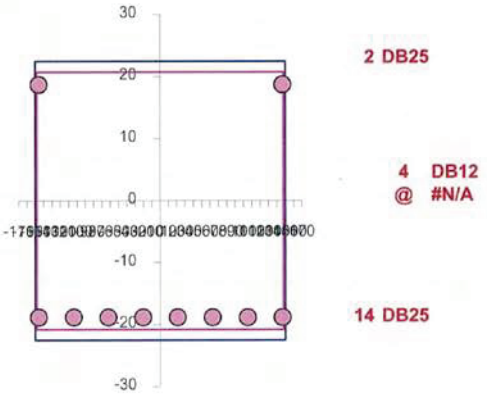

Positive Section
BDB-1 (300 X 45)

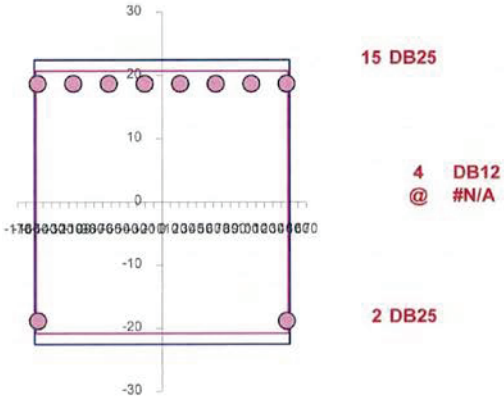

Negative Section
BDB-1 (300 X 45)

KINGDOM OF THAILAND
CHOKCHAI KHATKHAJORN
โชคชัย ขัดขจร
สย. 4522
REGISTERED PROFESSIONAL ENGINEER

DYNAMIC ENGINEERING CONSULTANT CO., LTD.

RC-I EXCEL — **Ultimate Stress Design method in accordance with ACI 318**

Design Reinforced Concrete Beam

Project	อาคารทิศตะวันตก โซน ซี	**Beam Code**	BDB-3
Engineer	CKJ	**File Name**	Beam
		Date	12 Nov 20

	fc'	=	350	[kg/cm²]
	fy SD	=	4000	[kg/cm²]
	fy SD	=	4000	[kg/cm²]
$M_{-pos.}$	Mu^+	=	59170	[kg-m]
$M_{-neg.}$	Mu^-	=	25000	[kg-m]
$V_{max.}$	Vu	=	33865	[kg]
	DL	=	3480	[kg/m]
	LL	=	5520	[kg/m]
Length	Ln	=	540	[cm]
width	b	=	150	[cm]
depth	t	=	45	[cm]
	d'	=	5	[cm]
siding	d"	=	3.5	[cm]

For Positive Moment :

Upper Steel	DB25
Lower Steel	DB25
Stirrup Steel	DB12

d	=	40	[cm]
a try	=	3.8701	[cm]
As	=	43.179	[cm²]
a	=	**3.8704**	[cm]
ϕ Bend	=	0.90	
ϕ Shea	=	0.85	
k1	=	0.80	
Es	=	2040000	[kg/cm²]
Ec	=	284553	[kg/cm²]
n	=	7	
ρ	=	0.0360	
ρ_{max}	=	0.0270	
As	=	161.889	[cm²]
a	=	14.511	[cm]
Mu	=	190835	[kg-m]
M1	=	0	[kg-m]
As'	=	0.0000	[cm²]
No. of steel	=	**2**	
As	=	9.82	[cm²]
Σ As	=	43.179	[cm²]
No. of steel	=	**9**	
As	=	44.18	[cm²]

Section OK

For Negative Moment :

Upper Steel	DB25
Lower Steel	DB25
Stirrup Steel	DB12

d	=	40	[cm]
a try	=	8.7110	[cm]
As	=	19.483	[cm²]
a	=	**1.7463**	[cm]
ϕ Bend	=	0.90	
ϕ Shea	=	0.85	
k1	=	1.05	
Es	=	2040000	[kg/cm²]
Ec	=	284553	[kg/cm²]
n	=	7	
ρ	=	0.0472	
ρ_{max}	=	0.0354	
As	=	212.479	[cm²]
a	=	19.046	[cm]
Mu	=	233127	[kg-m]
M1	=	0	[kg-m]
As'	=	0.0000	[cm²]
No. of steel	=	**2**	
As	=	9.82	[cm²]
Σ As	=	19.483	[cm²]
No. of steel	=	**4**	
As	=	19.63	[cm²]

Section OK

Stirrup Design

$0.53\,\phi\,(fc')^{0.5}\,bd$	=	53543	[kg]	
L=Ln/2(Vu - ϕ Vc)/Vu	=	-92.9	[cm]	
S	=	-31.266	[cm]	
Used Stirrup	2	DB12 @ #N/A		#N/A

Check Deflection

Δ all	=	1.50	[cm]		
ρ fy	=	29	<	35	[kg/cm²]
Y'	=	10.9			
I	=	800000	[cm⁴]		
Ec	=	284116	[kg/cm²]		
Δ	=	0.44	[cm] <	Δ all	OK
Δ Time	=	0.55	<	Δ all	OK

KINGDOM OF THAILAND
CHOKCHAI KHATKHAJORN
โชคชัย ขัดขจร
สย. 4522
REGISTERED PROFESSIONAL ENGINEER

DYNAMIC ENGINEERING CONSULTANT CO., LTD.

RC-I EXCEL — **Ultimate Stress Design method in accordance with ACI 318**

Design Reinforced Concrete Beam

Project	อาคารทิศตะวันตก โซน ซี	Beam Code	BDB-3
Engineer	CKJ	File Name	Beam
		Date	12 Nov 20

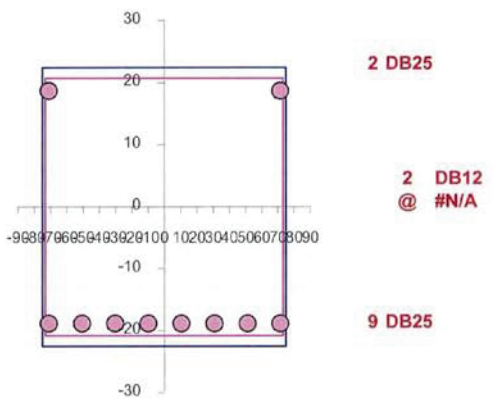

Positive Section
BDB-3 (150 X 45)

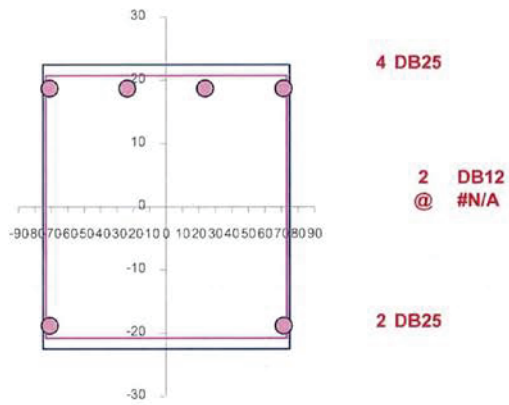

Negative Section
BDB-3 (150 X 45)

KINGDOM OF THAILAND
CHOKCHAI KHATKHAJORN
โชคชัย ขัดขจร
สย. 4522
REGISTERED PROFESSIONAL ENGINEER

DYNAMIC ENGINEERING CONSULTANT CO., LTD.		Job No.	193018
Design Reinforced Concrete Beam		Rev.	1
(Ultimate Stress Design method in accordance with ACI 318)		Initial	CKJ
Beam No.	BDB-2	Date	12-Nov-20
Project :	อาคารทิศตะวันตก	File	Beam B

	fc'	=	350	[kg/cm^2]
	fy SD	=	4000	[kg/cm^2]
	fy SR	=	2400	[kg/cm^2]
$M_{-pos.}$	Mu^+	=	56470	[kg-m]
$M_{-neg.}$	Mu^-	=	56470	[kg-m]
$V_{max.}$	Vu	=	34400	[kg]
	DL	=	4100	[kg/m]
	LL	=	5100	[kg/m]
Length	Ln	=	540	[cm]
width	b	=	200	[cm]
depth	t	=	45	[cm]
	d'	=	5	[cm]
siding	d''	=	3.5	[cm]

For Positive Moment :

Upper Steel	DB 25
Lower Steel	DB 25
Stirrup Steel	RB 12

d	=	40	[cm]
a try	=	2.7294	[cm]
As	=	40.600	[cm^2]
a	=	**2.7294**	[cm]
ϕ Bend	=	0.90	
ϕ Shea	=	0.85	
k1	=	0.80	
Es	=	2040000	[kg/cm^2]
Ec	=	284553	[kg/cm^2]
n	=	7	
ρ	=	0.0360	
ρ_{max}	=	0.0270	
As	=	215.851	[cm^2]
a	=	14.511	[cm]
Mu	=	254446	[kg-m]
M1	=	0	[kg-m]
As'	=	0.0000	[cm^2]
No. of steel	=	**2**	
As	=	9.82	[cm^2]
Σ As	=	40.600	[cm^2]
No. of steel	=	**9**	
As	=	44.18	[cm^2]

Section OK

Stirrup Design

0.53 ϕ (fc')$^{0.5}$ bd	=	71391	[kg]	
L=Ln/2(Vu - ϕ Vc)/Vu	=	-206.3	[cm]	
S	=	-4.990	[cm]	
Used Stirrup	3	**RB 12 @ #N/A**		**#N/A**

For Negative Moment :

Upper Steel	DB 25
Lower Steel	DB 25
Stirrup Steel	RB 12

d	=	40	[cm]
a try	=	8.7110	[cm]
As	=	40.600	[cm^2]
a	=	**2.7294**	[cm]
ϕ Bend	=	0.90	
ϕ Shea	=	0.85	
k1	=	1.05	
Es	=	2040000	[kg/cm^2]
Ec	=	284553	[kg/cm^2]
n	=	7	
ρ	=	0.0472	
ρ_{max}	=	0.0354	
As	=	283.305	[cm^2]
a	=	19.046	[cm]
Mu	=	310836	[kg-m]
M1	=	0	[kg-m]
As'	=	0.0000	[cm^2]
No. of steel	=	**2**	
As	=	9.82	[cm^2]
Σ As	=	40.600	[cm^2]
No. of steel	=	**9**	
As	=	44.18	[cm^2]

Section OK

Check Deflection

Δ all	=	1.50	[cm]		
ρ fy	=	22	<	35	[kg/cm^2]
Y'	=	9.68			
I	=	1066667	[cm^4]		
Ec	=	284116	[kg/cm^2]		
Δ	=	0.34	[cm] <	Δ all	OK
Δ Time	=	0.45	<	Δ all	OK

KINGDOM OF THAILAND
CHOKCHAI KHATKHAJORN
โชคชัย ขัดขจร
สย. 4522
REGISTERED PROFESSIONAL ENGINEER

DYNAMIC ENGINEERING CONSULTANT CO., LTD.		Job No.	193018
Design Reinforced Concrete Beam		Rev.	1
(Ultimate Stress Design method in accordance with ACI 318)		Initial	CKJ
Beam No.	BDB-2	Date	12-Nov-20
Project :	อาคารทิศตะวันตก	File	Beam B

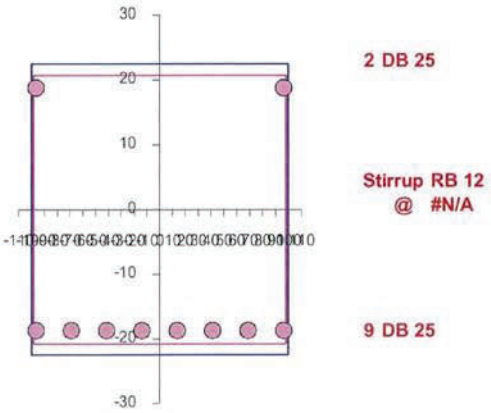

Positive Section

BDB-2 (200 X 45)

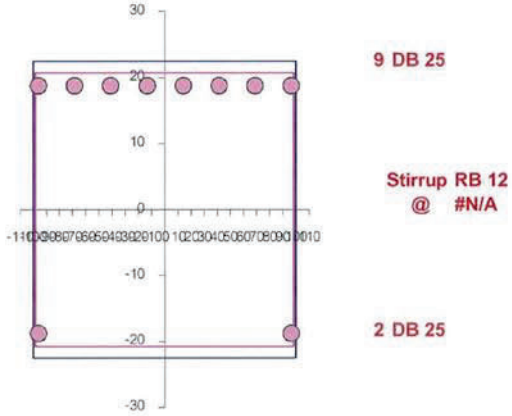

Negative Section

BDB-2 (200 X 45)

KINGDOM OF THAILAND
CHOKCHAI KHATKHAJORN
โชคชัย ขัดขจร
สย. 4522
REGISTERED PROFESSIONAL ENGINEER

DYNAMIC ENGINEERING CONSULTANT CO., LTD.

RC-I EXCEL — **Ultimate Stress Design method in accordance with ACI 318**

Design Reinforced Concrete Beam

Project	อาคารทิศตะวันตก โซน ซี	**Beam Code**	BDB-4
Engineer	CKJ	**File Name**	Beam
		Date	12 Nov 20

	fc'	=	350	[kg/cm²]
	fy SD	=	4000	[kg/cm²]
	fy SD	=	4000	[kg/cm²]
$M_{-pos.}$	Mu^+	=	141065	[kg-m]
$M_{-neg.}$	Mu^-	=	141065	[kg-m]
$V_{max.}$	Vu	=	79548	[kg]
	DL	=	6700	[kg/m]
	LL	=	12240	[kg/m]
Length	Ln	=	800	[cm]
width	b	=	400	[cm]
depth	t	=	45	[cm]
	d'	=	5	[cm]
siding	d"	=	3.5	[cm]

For Positive Moment :

Upper Steel	DB25
Lower Steel	DB25
Stirrup Steel	DB12

d	=	40	[cm]
a try	=	3.4408	[cm]
As	=	102.365	[cm²]
a	=	**3.4408**	[cm]
ϕ Bend	=	0.90	
ϕ Shea	=	0.85	
k1	=	0.80	
Es	=	2040000	[kg/cm²]
Ec	=	284553	[kg/cm²]
n	=	7	
ρ	=	0.0360	
ρ_{max}	=	0.0270	
As	=	431.703	[cm²]
a	=	14.511	[cm]
Mu	=	508892	[kg-m]
M1	=	0	[kg-m]
As'	=	0.0000	[cm²]
No. of steel	=	**2**	
As	=	9.82	[cm²]
Σ As	=	102.365	[cm²]
No. of steel	=	**21**	
As	=	103.08	[cm²]

Section OK

For Negative Moment :

Upper Steel	DB25
Lower Steel	DB25
Stirrup Steel	DB12

d	=	40	[cm]
a try	=	8.7110	[cm]
As	=	109.932	[cm²]
a	=	**3.6952**	[cm]
ϕ Bend	=	0.90	
ϕ Shea	=	0.85	
k1	=	1.05	
Es	=	2040000	[kg/cm²]
Ec	=	284553	[kg/cm²]
n	=	7	
ρ	=	0.0472	
ρ_{max}	=	0.0354	
As	=	566.610	[cm²]
a	=	19.046	[cm]
Mu	=	621672	[kg-m]
M1	=	0	[kg-m]
As'	=	0.0000	[cm²]
No. of steel	=	**2**	
As	=	9.82	[cm²]
Σ As	=	109.932	[cm²]
No. of steel	=	**23**	
As	=	112.90	[cm²]

Section OK

Stirrup Design

$0.53\,\phi\,(fc')^{0.5}\,bd$	=	142782	[kg]
L=Ln/2(Vu - ϕ Vc)/Vu	=	-210.3	[cm]
S	=	-19.460	[cm]

Used Stirrup 4 | DB12 @ #N/A | #N/A

Check Deflection

Δ all	=	2.22	[cm]	
ρ fy	=	26 <	35	[kg/cm²]
Y'	=	10.3		
I	=	2133333	[cm⁴]	
Ec	=	284116	[kg/cm²]	
Δ	=	1.67 [cm]	<	Δ all **OK**
Δ Time	=	2.04	<	Δ all **OK**

KINGDOM OF THAILAND
CHOKCHAI KHATKHAJORN
โชคชัย ขัดขจร
สบ. 4522
REGISTERED PROFESSIONAL ENGINEER

DYNAMIC ENGINEERING CONSULTANT CO., LTD.

RC-I EXCEL — **Ultimate Stress Design method in accordance with ACI 318**

Design Reinforced Concrete Beam

Project	อาคารทิศตะวันตก โซน ซี	Beam Code	BDB-4
Engineer	CKJ	File Name	Beam
		Date	12 Nov 20

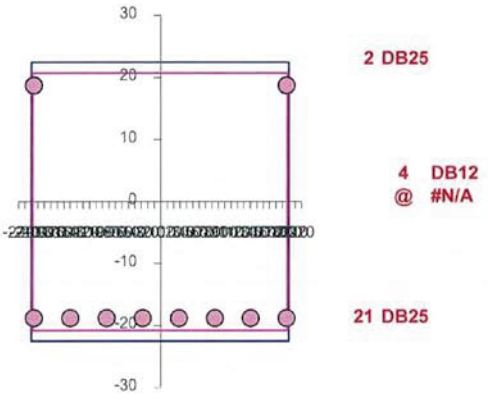

Positive Section
BDB-4 (400 X 45)

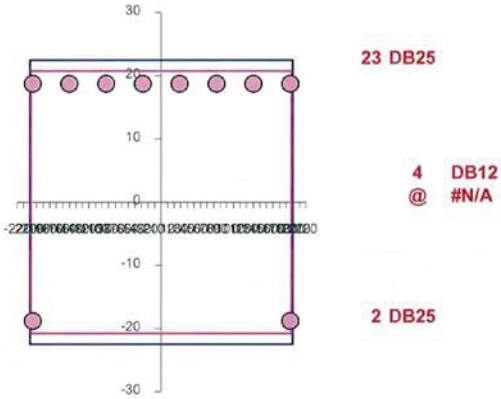

Negative Section
BDB-4 (400 X 45)

KINGDOM OF THAILAND
CHOKCHAI KHATKHAJORN
โชคชัย ขัดขจร
สย. 4522
REGISTERED PROFESSIONAL ENGINEER

DYNAMIC ENGINEERING CONSULTANT CO., LTD.

RC-I EXCEL — Ultimate Stress Design method in accordance with ACI 318

Design Reinforced Concrete Beam

Project	อาคารทิศตะวันตก โซน ซี	Beam Code	BDB-4A
Engineer	CKJ	File Name	Beam
		Date	12 Nov 20

	fc'	=	350	[kg/cm²]
	fy SD	=	4000	[kg/cm²]
	fy SD	=	4000	[kg/cm²]
$M_{-pos.}$	Mu^{+}	=	141065	[kg-m]
$M_{-neg.}$	Mu^{-}	=	141065	[kg-m]
$V_{max.}$	Vu	=	79548	[kg]
	DL	=	6700	[kg/m]
	LL	=	12240	[kg/m]
Length	Ln	=	800	[cm]
width	b	=	450	[cm]
depth	t	=	45	[cm]
	d'	=	5	[cm]
siding	d''	=	3.5	[cm]

For Positive Moment :

Upper Steel	DB25
Lower Steel	DB25
Stirrup Steel	DB12

	d	=	40	[cm]
	a try	=	3.0426	[cm]
	As	=	101.835	[cm²]
	a	=	**3.0427**	[cm]
	ϕ Bend	=	0.90	
	ϕ Shea	=	0.85	
	k1	=	0.80	
	Es	=	2040000	[kg/cm²]
	Ec	=	284553	[kg/cm²]
	n	=	7	
	ρ	=	0.0360	
	ρ_{max}	=	0.0270	
	As	=	485.666	[cm²]
	a	=	14.511	[cm]
	Mu	=	572504	[kg-m]
	M1	=	0	[kg-m]
	As'	=	0.0000	[cm²]
No. of steel		=	**2**	
	As	=	9.82	[cm²]
	Σ As	=	101.835	[cm²]
No. of steel		=	**21**	
	As	=	103.08	[cm²]

Section OK

Stirrup Design

$0.53\ \phi\ (fc')^{0.5}\ bd$	=	160629	[kg]
L=Ln/2(Vu - ϕ Vc)/Vu	=	-286.6	[cm]
S	=	-15.176	[cm]
Used Stirrup	4	DB12 @ #N/A	#N/A

For Negative Moment :

Upper Steel	DB25
Lower Steel	DB25
Stirrup Steel	DB12

	d	=	40	[cm]
	a try	=	8.7110	[cm]
	As	=	109.932	[cm²]
	a	=	**3.2846**	[cm]
	ϕ Bend	=	0.90	
	ϕ Shea	=	0.85	
	k1	=	1.05	
	Es	=	2040000	[kg/cm²]
	Ec	=	284553	[kg/cm²]
	n	=	7	
	ρ	=	0.0472	
	ρ_{max}	=	0.0354	
	As	=	637.436	[cm²]
	a	=	19.046	[cm]
	Mu	=	699381	[kg-m]
	M1	=	0	[kg-m]
	As'	=	0.0000	[cm²]
No. of steel		=	**2**	
	As	=	9.82	[cm²]
	Σ As	=	109.932	[cm²]
No. of steel		=	**23**	
	As	=	112.90	[cm²]

Section OK

Check Deflection

Δ all	=	2.22	[cm]		
ρ fy	=	23	<	35	[kg/cm²]
Y'	=	9.84			
I	=	2400000	[cm⁴]		
Ec	=	284116	[kg/cm²]		
Δ	=	1.48	[cm] <	Δ all	OK
Δ Time	=	1.81	<	Δ all	OK

KINGDOM OF THAILAND
CHOKCHAI KHATKHAJORN
โชคชัย ขัดขจร
สย. 4522
REGISTERED PROFESSIONAL ENGINEER

DYNAMIC ENGINEERING CONSULTANT CO., LTD.

RC-I EXCEL — Ultimate Stress Design method in accordance with ACI 318

Design Reinforced Concrete Beam

Project	อาคารทิศตะวันตก โซน ซี	Beam Code	BDB-4A
Engineer	CKJ	File Name	Beam
		Date	12 Nov 20

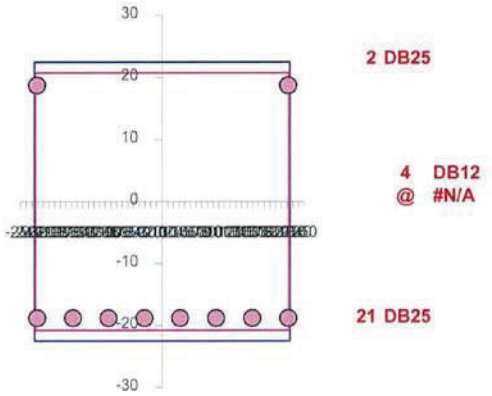

Positive Section
BDB-4A (450 X 45)

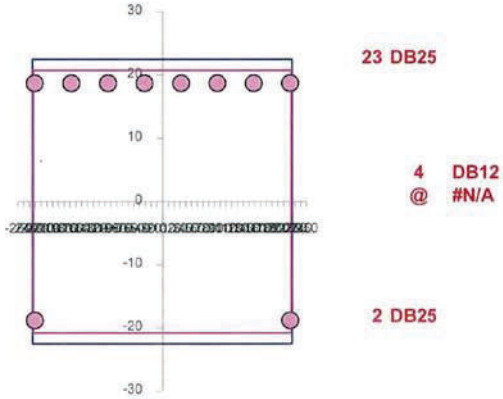

Negative Section
BDB-4A (450 X 45)

KINGDOM OF THAILAND
CHOKCHAI KHATKHAJORN
โชคชัย ขัดขจร
สย. 4522
REGISTERED PROFESSIONAL ENGINEER

DYNAMIC ENGINEERING CONSULTANT CO., LTD.

Design Reinforced Concrete Beam

(Ultimate Stress Design method in accordance with ACI 318-89)

Job No.	193018		
Rev.	1		
Initial	CKJ		
Date	12-Nov-20		
File	Beam B		

Beam No. RB-1

Project : อาคารทิศตะวันออก

	fc'	=	350	[kg/cm^2]
	fy SD	=	4000	[kg/cm^2]
	fy SR	=	2400	[kg/cm^2]
$M_{-pos.}$	Mu^+	=	25715	[kg-m]
$M_{-neg.}$	Mu^-	=	25715	[kg-m]
$V_{max.}$	Vu	=	13776	[kg]
	DL	=	3025	[kg/m]
	LL	=	2550	[kg/m]
Length	Ln	=	540	[cm]
width	b	=	200	[cm]
depth	t	=	35	[cm]
	d'	=	5	[cm]
siding	d"	=	3.5	[cm]

For Positive Moment :

Upper Steel	DB 20
Lower Steel	DB 20
Stirrup Steel	RB 12

	d	=	30 [cm]
	a try	=	1.6458 [cm]
	As	=	24.482 [cm^2]
	a	=	**1.6458** [cm]
	ϕ Bend	=	0.90
	ϕ Shea	=	0.85
	k1	=	0.80
	Es	=	2040000 [kg/cm^2]
	Ec	=	284553 [kg/cm^2]
	n	=	7
	ρ	=	0.0360
	ρ_{max}	=	0.0270
	As	=	161.889 [cm^2]
	a	=	10.883 [cm]
	Mu	=	143126 [kg-m]
	M1	=	0 [kg-m]
	As'	=	0.0000 [cm^2]
	No. of steel	=	**2**
	As	=	6.28 [cm^2]
	Σ As	=	24.482 [cm^2]
	No. of steel	=	**8**
	As	=	25.13 [cm^2]

Section OK

Stirrup Design

$0.53\ \phi\ (fc')^{0.5}\ bd$	=	53543	[kg]	
L=Ln/2(Vu - ϕ Vc)/Vu	=	-622.0	[cm]	
S	=	-3.481	[cm]	
Used Stirrup		RB 12 @ #N/A		#N/A

For Negative Moment :

Upper Steel	DB 20
Lower Steel	DB 20
Stirrup Steel	RB 12

	d	=	30 [cm]
	a try	=	8.7110 [cm]
	As	=	24.482 [cm^2]
	a	=	**1.6458** [cm]
	ϕ Bend	=	0.90
	ϕ Shea	=	0.85
	k1	=	1.05
	Es	=	2040000 [kg/cm^2]
	Ec	=	284553 [kg/cm^2]
	n	=	7
	ρ	=	0.0472
	ρ_{max}	=	0.0354
	As	=	212.479 [cm^2]
	a	=	14.284 [cm]
	Mu	=	174845 [kg-m]
	M1	=	0 [kg-m]
	As'	=	0.0000 [cm^2]
	No. of steel	=	**2**
	As	=	6.28 [cm^2]
	Σ As	=	24.482 [cm^2]
	No. of steel	=	**8**
	As	=	25.13 [cm^2]

Section OK

Check Deflection

Δ all	=	1.50 [cm]			
ρ fy	=	17	<	35	[kg/cm^2]
Y'	=	6.44			
I	=	450000	[cm^4]		
Ec	=	284116	[kg/cm^2]		
Δ	=	0.48 [cm]	<	Δ all	OK
Δ Time	=	0.7	<	Δ all	OK

KINGDOM OF THAILAND
CHOKCHAI KHATKHAJORN
โชคชัย ขัดขจร
สย. 4522
REGISTERED PROFESSIONAL ENGINEER

DYNAMIC ENGINEERING CONSULTANT CO., LTD.		Job No.	193018
Design Reinforced Concrete Beam		Rev.	1
(Ultimate Stress Design method in accordance with ACI 318-89)		Initial	CKJ
Beam No.	RB-1	Date	12-Nov-20
Project :	อาคารทิศตะวันออก	File	Beam B

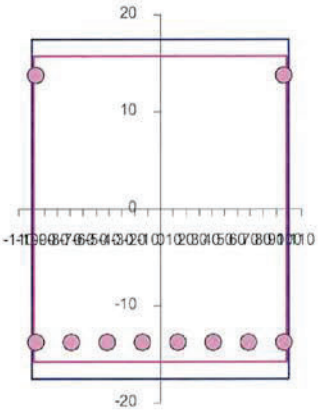

2 DB 20

Stirrup RB 12
@ #N/A

8 DB 20

Positive Section

RB-1 (200 X 35)

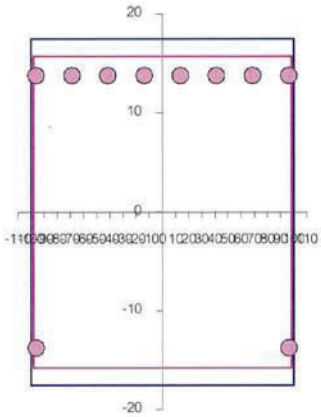

8 DB 20

Stirrup RB 12
@ #N/A

2 DB 20

Negative Section

RB-1 (200 X 35)

KINGDOM OF THAILAND
CHOKCHAI KHATKHAJORN
โชคชัย ขัดขจร
สย. 4522
REGISTERED PROFESSIONAL ENGINEER

DYNAMIC ENGINEERING CONSULTANT CO., LTD.		Job No.	193018
Design Reinforced Concrete Beam		Rev.	1
(Ultimate Stress Design method in accordance with ACI 318-89)		Initial	CKJ
Beam No.	RB-1A	Date	12-Nov-20
Project :	อาคารทิศตะวันออก	File	Beam B

	fc'	=	350	[kg/cm^2]
	fy SD	=	4000	[kg/cm^2]
	fy SR	=	2400	[kg/cm^2]
$M_{-pos.}$	Mu^+	=	17810	[kg-m]
$M_{-neg.}$	Mu^-	=	17810	[kg-m]
$V_{max.}$	Vu	=	12952	[kg]
	DL	=	4165	[kg/m]
	LL	=	545	[kg/m]
Length	Ln	=	400	[cm]
width	b	=	200	[cm]
depth	t	=	30	[cm]
	d'	=	5	[cm]
siding	d"	=	3.5	[cm]

For Positive Moment :

Upper Steel	DB 20
Lower Steel	DB 20
Stirrup Steel	RB 9

d	=	25	[cm]
a try	=	1.3674	[cm]
As	=	20.345	[cm^2]
a	=	**1.3677**	[cm]
ϕ Bend	=	0.90	
ϕ Shea	=	0.85	
k1	=	0.80	
Es	=	2040000	[kg/cm^2]
Ec	=	284553	[kg/cm^2]
n	=	7	
ρ	=	0.0360	
ρ_{max}	=	0.0270	
As	=	134.907	[cm^2]
a	=	9.069	[cm]
Mu	=	99393	[kg-m]
M1	=	0	[kg-m]
As'	=	0.0000	[cm^2]
No. of steel	=	**2**	
As	=	6.28	[cm^2]
Σ As	=	20.345	[cm^2]
No. of steel	=	**7**	
As	=	21.99	[cm^2]

Section OK

Stirrup Design

$0.53\,\phi\,(fc')^{0.5}\,bd$	=	44619	[kg]
L=Ln/2(Vu - ϕ Vc)/Vu	=	-385.6	[cm]
S	=	-2.049	[cm]
Used Stirrup		RB 9 @ #N/A	#N/A

For Negative Moment :

Upper Steel	DB 20
Lower Steel	DB 20
Stirrup Steel	RB 9

d	=	25	[cm]
a try	=	8.7110	[cm]
As	=	20.345	[cm^2]
a	=	**1.3677**	[cm]
ϕ Bend	=	0.90	
ϕ Shea	=	0.85	
k1	=	1.05	
Es	=	2040000	[kg/cm^2]
Ec	=	284553	[kg/cm^2]
n	=	7	
ρ	=	0.0472	
ρ_{max}	=	0.0354	
As	=	177.066	[cm^2]
a	=	11.904	[cm]
Mu	=	121420	[kg-m]
M1	=	0	[kg-m]
As'	=	0.0000	[cm^2]
No. of steel	=	**2**	
As	=	6.28	[cm^2]
Σ As	=	20.345	[cm^2]
No. of steel	=	**7**	
As	=	21.99	[cm^2]

Section OK

Check Deflection

Δ all	=	1.11	[cm]		
ρ fy	=	18	<	35	[kg/cm^2]
Y'	=	5.48			
I	=	260417	[cm^4]		
Ec	=	284116	[kg/cm^2]		
Δ	=	0.21	[cm] <	Δ all	OK
Δ Time	=	0.39	<	Δ all	OK

KINGDOM OF THAILAND
CHOKCHAI KHATKHAJORN
โชคชัย ขัดขจร
สย. 4522
REGISTERED PROFESSIONAL ENGINEER

DYNAMIC ENGINEERING CONSULTANT CO., LTD.		Job No.	193018
Design Reinforced Concrete Beam		Rev.	1
(Ultimate Stress Design method in accordance with ACI 318-89)		Initial	CKJ
Beam No.	RB-1A	Date	12-Nov-20
Project :	อาคารทิศตะวันออก	File	Beam B

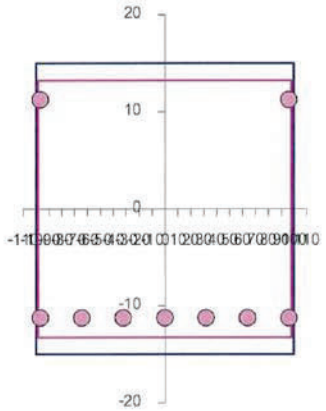

Positive Section

RB-1A (200 X 30)

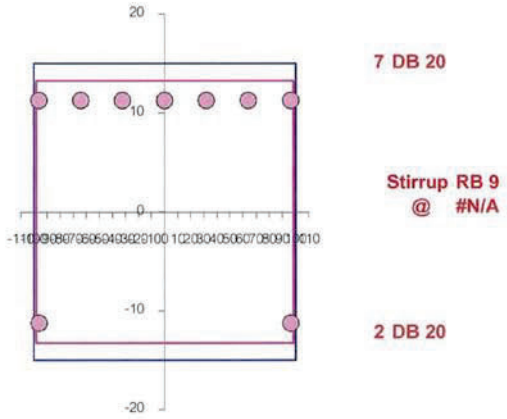

Negative Section

RB-1A (200 X 30)

KINGDOM OF THAILAND
CHOKCHAI KHATKHAJORN
โชคชัย ขัดขจร
สย. 4522
REGISTERED PROFESSIONAL ENGINEER

DYNAMIC ENGINEERING CONSULTANT CO., LTD.		Job No.	193018
Design Reinforced Concrete Beam		Rev.	1
(Ultimate Stress Design method in accordance with ACI 318-89)		Initial	CKJ
Beam No.	RB-2	Date	12-Nov-20
Project :	อาคารทิศตะวันออก	File	Beam B

	fc'	=	350	[kg/cm^2]
	fy SD	=	4000	[kg/cm^2]
	fy SR	=	2400	[kg/cm^2]
$M_{-pos.}$	Mu^+	=	40877	[kg-m]
$M_{-neg.}$	Mu^-	=	40877	[kg-m]
$V_{max.}$	Vu	=	21899	[kg]
	DL	=	4704	[kg/m]
	LL	=	510	[kg/m]
Length	Ln	=	540	[cm]
width	b	=	300	[cm]
depth	t	=	35	[cm]
	d'	=	5	[cm]
siding	d"	=	3.5	[cm]

For Positive Moment :

Upper Steel	DB 20
Lower Steel	DB 20
Stirrup Steel	RB 9

d	=	30	[cm]
a try	=	1.7471	[cm]
As	=	38.984	[cm^2]
a	=	**1.7472**	[cm]
ϕ Bend	=	0.90	
ϕ Shea	=	0.85	
k1	=	0.80	
Es	=	2040000	[kg/cm^2]
Ec	=	284553	[kg/cm^2]
n	=	7	
ρ	=	0.0360	
ρ_{max}	=	0.0270	
As	=	242.833	[cm^2]
a	=	10.883	[cm]
Mu	=	214689	[kg-m]
M1	=	0	[kg-m]
As'	=	0.0000	[cm^2]
No. of steel	=	**2**	
As	=	6.28	[cm^2]
Σ As	=	38.984	[cm^2]
No. of steel	=	**13**	
As	=	40.84	[cm^2]

Section OK

Stirrup Design

$0.53\ \phi\ (fc')^{0.5}\ bd$	=	80315	[kg]	
L=Ln/2(Vu - ϕ Vc)/Vu	=	-571.7	[cm]	
S	=	-1.333	[cm]	
Used Stirrup		RB 9 @ #N/A		#N/A

For Negative Moment :

Upper Steel	DB 20
Lower Steel	DB 20
Stirrup Steel	RB 9

d	=	30	[cm]
a try	=	8.7110	[cm]
As	=	38.984	[cm^2]
a	=	**1.7472**	[cm]
ϕ Bend	=	0.90	
ϕ Shea	=	0.85	
k1	=	1.05	
Es	=	2040000	[kg/cm^2]
Ec	=	284553	[kg/cm^2]
n	=	7	
ρ	=	0.0472	
ρ_{max}	=	0.0354	
As	=	318.718	[cm^2]
a	=	14.284	[cm]
Mu	=	262268	[kg-m]
M1	=	0	[kg-m]
As'	=	0.0000	[cm^2]
No. of steel	=	**2**	
As	=	6.28	[cm^2]
Σ As	=	38.984	[cm^2]
No. of steel	=	**13**	
As	=	40.84	[cm^2]

Section OK

Check Deflection

Δ all	=	1.50	[cm]		
ρ fy	=	18	<	35	[kg/cm^2]
Y'	=	6.67			
I	=	675000	[cm^4]		
Ec	=	284116	[kg/cm^2]		
Δ	=	0.30	[cm] <	Δ all	OK
Δ Time	=	0.57	<	Δ all	OK

KINGDOM OF THAILAND
CHOKCHAI KHATKHAJORN
โชคชัย ขัดขจร
สย. 4522
REGISTERED PROFESSIONAL ENGINEER

DYNAMIC ENGINEERING CONSULTANT CO., LTD.		Job No.	193018
Design Reinforced Concrete Beam		Rev.	1
(Ultimate Stress Design method in accordance with ACI 318-89)		Initial	CKJ
Beam No.	RB-2	Date	12-Nov-20
Project :	อาคารทิศตะวันออก	File	Beam B

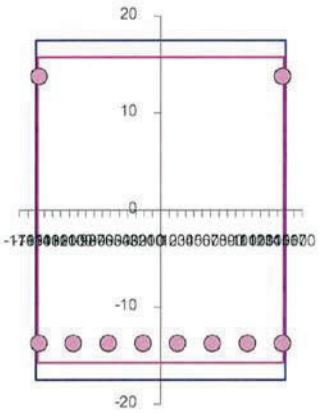

Positive Section
RB-2 (300 X 35)

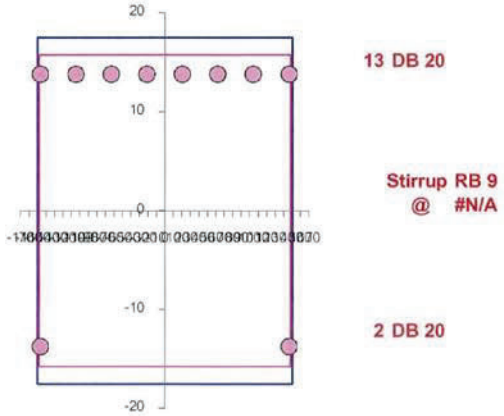

Negative Section
RB-2 (300 X 35)

KINGDOM OF THAILAND
CHOKCHAI KHATKHAJORN
โชคชัย ขัดขจร
สย. 4522
REGISTERED PROFESSIONAL ENGINEER

DYNAMIC ENGINEERING CONSULTANT CO., LTD.		Job No.	193018
Design Reinforced Concrete Beam		Rev.	1
(Ultimate Stress Design method in accordance with ACI 318-89)		Initial	CKJ
Beam No.	RB-2A	Date	12-Nov-20
Project :	อาคารทิศตะวันออก	File	Beam B

	fc'	=	350	[kg/cm^2]
	fy SD	=	4000	[kg/cm^2]
	fy SR	=	2400	[kg/cm^2]
$M_{-pos.}$	Mu^+	=	19718	[kg-m]
$M_{-neg.}$	Mu^-	=	19718	[kg-m]
$V_{max.}$	Vu	=	14339	[kg]
	DL	=	4704	[kg/m]
	LL	=	500	[kg/m]
Length	Ln	=	500	[cm]
width	b	=	300	[cm]
depth	t	=	30	[cm]
	d'	=	5	[cm]
siding	d"	=	3.5	[cm]

For Positive Moment :

Upper Steel	DB 20
Lower Steel	DB 20
Stirrup Steel	RB 9

d	=	25	[cm]
a try	=	1.0019	[cm]
As	=	22.357	[cm^2]
a	=	**1.0020**	[cm]
ϕ Bend	=	0.90	
ϕ Shea	=	0.85	
k1	=	0.80	
Es	=	2040000	[kg/cm^2]
Ec	=	284553	[kg/cm^2]
n	=	7	
ρ	=	0.0360	
ρ_{max}	=	0.0270	
As	=	202.361	[cm^2]
a	=	9.069	[cm]
Mu	=	149089	[kg-m]
M1	=	0	[kg-m]
As'	=	0.0000	[cm^2]
No. of steel	=	**2**	
As	=	6.28	[cm^2]
Σ As	=	22.357	[cm^2]
No. of steel	=	**8**	
As	=	25.13	[cm^2]

Section OK

Stirrup Design

$0.53\ \phi\ (fc')^{0.5}$ bd	=	66929	[kg]
L=Ln/2(Vu - ϕ Vc)/Vu	=	-741.9	[cm]
S	=	-1.234	[cm]
Used Stirrup		RB 9 @ #N/A	#N/A

For Negative Moment :

Upper Steel	DB 20
Lower Steel	DB 20
Stirrup Steel	RB 9

d	=	25	[cm]
a try	=	8.7110	[cm]
As	=	22.357	[cm^2]
a	=	**1.0020**	[cm]
ϕ Bend	=	0.90	
ϕ Shea	=	0.85	
k1	=	1.05	
Es	=	2040000	[kg/cm^2]
Ec	=	284553	[kg/cm^2]
n	=	7	
ρ	=	0.0472	
ρ_{max}	=	0.0354	
As	=	265.598	[cm^2]
a	=	11.904	[cm]
Mu	=	182130	[kg-m]
M1	=	0	[kg-m]
As'	=	0.0000	[cm^2]
No. of steel	=	**2**	
As	=	6.28	[cm^2]
Σ As	=	22.357	[cm^2]
No. of steel	=	**8**	
As	=	25.13	[cm^2]

Section OK

Check Deflection

Δ all	=	1.39	[cm]		
ρ fy	=	13	<	35	[kg/cm^2]
Y'	=	4.86			
I	=	390625	[cm^4]		
Ec	=	284116	[kg/cm^2]		
Δ	=	0.38	[cm] <	Δ all	OK
Δ Time	=	0.72	<	Δ all	OK

KINGDOM OF THAILAND
CHOKCHAI KHATKHAJORN
โชคชัย ขัดขจร
สย. 4522
REGISTERED PROFESSIONAL ENGINEER

DYNAMIC ENGINEERING CONSULTANT CO., LTD.		Job No.	193018
Design Reinforced Concrete Beam		Rev.	1
(Ultimate Stress Design method in accordance with ACI 318-89)		Initial	CKJ
Beam No.	RB-2A	Date	12-Nov-20
Project :	อาคารทิศตะวันออก	File	Beam B

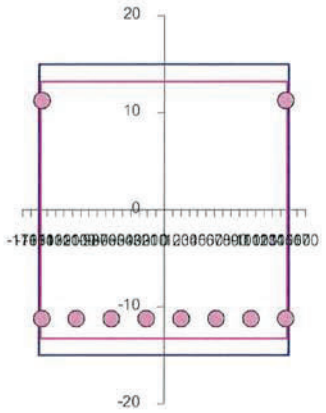

2 DB 20

Stirrup RB 9
@ #N/A

8 DB 20

Positive Section
RB-2A (300 X 30)

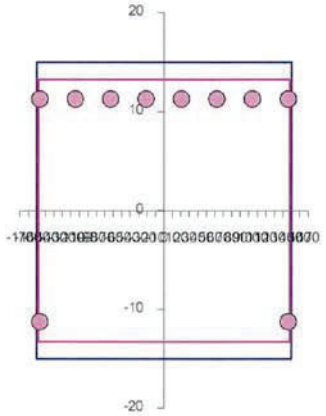

8 DB 20

Stirrup RB 9
@ #N/A

2 DB 20

Negative Section
RB-2A (300 X 30)

KINGDOM OF THAILAND
CHOKCHAI KHATKHAJORN
โชคชัย ขัดขจร
สย. 4522
REGISTERED PROFESSIONAL ENGINEER

6. รายการคำนวณบันได และเบ็ดเตล็ด

KINGDOM OF THAILAND
CHOKCHAI KHATKHAJORN
โชคชัย ขัดขจร
สย. 4522
REGISTERED PROFESSIONAL ENGINEER

Design ST-1-Typical Page 1

DYNAMIC ENGINEERING CONSULTANTS CO., LTD.
281 SOI PHANIT ANAN 7 SUKHUMVIT 71
BANGKOK 10110
PHONE: (66-2) 713-3888, FAX: (66-2) 713-3889

Project No. : 193018 Date : 11/13/2020
Project Name : ศูนย์ราชการ โซน ซี
Subject : อาคารทิศตะวันออก
Made by : โชคชัย Checked by : โชคชัย

Ref. ST-1-Typical

MATERIAL PROPERTY			
(1) CONCRETE STREGTH(Fc')	=	350	ksc.
(2) YIELD STRENGTH (Fy)	=	4000	ksc.
(3) YIELD STRENGTH (Fv)	=	2400	ksc.

SECTION PROPERTY			
(1) HEIGHT OF STAIR	=	1.80	m.
(2) LANDING SPAN (L1)	=	0.10	m.
(3) STAIR SPAN (L2)	=	3.30	m.
(4) LANDING SPAN (L3)	=	1.90	m.
(5) UP STEP DIST (r)	=	0.150	m.
(6) HOR STEP DIST (s)	=	0.300	m.
(7) ASSUME THICKNESS (t)	=	0.150	m.
(8) COVERING (d')	=	0.025	m.
(9) EFFECTIVE DEPTH (d)	=	0.125	m.

LOADING			
(1) DL.1 OF SLAB	=	402	ksm.
(2) DL.2 STEP OF STAIR	=	180	ksm.
(3) DL.3OF LANDING SLAB	=	360	ksm.
(4) LIVELOAD	=	300	ksm.

LOAD FACTOR	
(1) DEAD LOAD	1.40
(2) LIVE LOAD	1.70

COMPUTATION				
Fc (all)	0.45*Fc'	=	158	ksc.
Fs (all)	0.5*Fy	=	2000	ksc.
SR24	Pmin	=	0.0025	
SD30,40	Pmin	=	0.002	
SD50	Pmin	=	0.0015	
pmax	= 0.75*pb	=	0.0287	
Beta		=	0.8	
w1=1.4*DL1+1.7*LL		=	1014	ksm.
w2=1.4(DL1+DL2)+1.7*LL		=	1325	ksm.
w3=1.4*DL1+1.7*LL		=	1014	ksm.
REACTION (Ra)		=	3376	kg.
REACTION (Rb)		=	3027	kg.
POINT GIVE MAX.MOMENT		=	2.57	m.
MAX MOMENT		=	4376	kg-m.
d		=	7.3	cm.
ρ		=	0.00824	
As	= ρbd	=	10.3	cm.2
Ast	= 0.002*b*t	=	4.50	cm.2

	DESIGN	ACTUAL		CHECK
DESIGN EFFECTIVE DEPTH	12.50	7.25	cm.	O.K.
SHEAR STRESS	5.43	2.70	ksc.	O.K.

MAIN STEEL	DB	10	12	16	20	22	25	mm.
SPACING		7.1	10.5	19.0	30.0	30.0	30.0	cm.
BOND STRESS		14.3	11.9	9.0	7.2	6.5	5.7	ksc.
ALLOWABLE BOND STRESS		11.00	11.00	11.00	11.00	11.00	11.00	
BOND CHECKING		FAIL	FAIL	O.K	O.K	O.K	O.K	
TEMPERATURE STEEL	RB	6	9	12	15			mm.
		5.8	13.6	24.6	30.0			cm.

THICKNESS OF STAIR		15	cm.		
MAIN STEEL	DB	16	SPACING	15	cm.
TEMPERATURE STEEL	RB	9	SPACING	20	cm.

REACTIOPN ON LEFT BEAM (Ra) =	3376	kg/m
REACTIOPN ON RIGTH BEAM (Rb) =	3027	kg/m

KINGDOM OF THAILAND
CHOKCHAI KHATKHA JORN
โชคชัย ขัดขจร
สย. 4522
REGISTERED PROFESSIONAL ENGINEER

Design ST-1(4-5) Page 1

DYNAMIC ENGINEERING CONSULTANTS CO., LTD.
281 SOI PHANIT ANAN 7 SUKHUMVIT 71
BANGKOK 10110
PHONE: (66-2) 713-3888, FAX: (66-2) 713-3889

Project No. : 193018 Date : 11/16/2020
Project Name : ศูนย์ราชการ โซน ซี
Subject : อาคารทิศตะวันออก
Made by : โชคชัย Checked by : โชคชัย

Ref. ST-1(4-5)

MATERIAL PROPERTY			
(1) CONCRETE STREGTH(Fc')	=	350	ksc.
(2) YIELD STRENGTH (Fy)	=	4000	ksc.
(3) YIELD STRENGTH (Fv)	=	2400	ksc.

SECTION PROPERTY			
(1) HEIGHT OF STAIR	=	2.15	m.
(2) LANDING SPAN (L1)	=	0.01	m.
(3) STAIR SPAN (L2)	=	3.90	m.
(4) LANDING SPAN (L3)	=	1.69	m.
(5) UP STEP DIST (r)	=	0.165	m.
(6) HOR STEP DIST (s)	=	0.300	m.
(7) ASSUME THICKNESS (t)	=	0.150	m.
(8) COVERING (d')	=	0.025	m.
(9) EFFECTIVE DEPTH (d)	=	0.125	m.

LOADING			
(1) DL.1 OF SLAB	=	411	ksm.
(2) DL.2 STEP OF STAIR	=	198	ksm.
(3) DL.3OF LANDING SLAB	=	360	ksm.
(4) LIVELOAD	=	300	ksm.

LOAD FACTOR	
(1) DEAD LOAD	1.40
(2) LIVE LOAD	1.70

COMPUTATION				
Fc (all)	0.45*Fc'	=	158	ksc.
Fs (all)	0.5*Fy	=	2000	ksc.
SR24	Pmin	=	0.0025	
SD30,40	Pmin	=	0.002	
SD50	Pmin	=	0.0015	
pmax	= 0.75*pb	=	0.0287	
Beta		=	0.8	
w1=1.4*DL1+1.7*LL		=	1014	ksm.
w2=1.4(DL1+DL2)+1.7*LL		=	1362	ksm.
w3=1.4*DL1+1.7*LL		=	1014	ksm.
REACTION (Ra)		=	3722	kg.
REACTION (Rb)		=	3315	kg.
POINT GIVE MAX.MOMENT		=	2.73	m.
MAX MOMENT		=	5095	kg-m.
d		=	7.8	cm.
ρ		=	0.00969	
As	= ρbd	=	12.1	cm.2
Ast	= 0.002*b*t	=	5.38	cm.2

	DESIGN	ACTUAL		CHECK
DESIGN EFFECTIVE DEPTH	12.50	7.82	cm.	O.K.
SHEAR STRESS	5.43	2.98	ksc.	O.K.

MAIN STEEL	DB	10	12	16	20	22	25	mm.
SPACING		6.0	8.8	16.1	25.4	30.0	30.0	cm.
BOND STRESS		15.8	13.2	9.9	7.9	7.2	6.3	ksc.
ALLOWABLE BOND STRESS		11.00	11.00	11.00	11.00	11.00	11.00	
BOND CHECKING		FAIL	FAIL	O.K	O.K	O.K	O.K	
TEMPERATURE STEEL	RB	6	9	12	15			mm.
		4.8	11.3	20.5	30.0			cm.

THICKNESS OF STAIR		15	cm.		
MAIN STEEL	DB	16	SPACING	15	cm.
TEMPERATURE STEEL	RB	9	SPACING	20	cm.

REACTIOPN ON LEFT BEAM (Ra) =	3722	kg/m
REACTIOPN ON RIGTH BEAM (Rb) =	3315	kg/m

KINGDOM OF THAILAND
CHOKCHAI KHATKHAJORN
โชคชัย ขัดขจร
สย. 4522
REGISTERED PROFESSIONAL ENGINEER

Design ST-1A Page 1

DYNAMIC ENGINEERING CONSULTANTS CO., LTD.
281 SOI PHANIT ANAN 7 SUKHUMVIT 71
BANGKOK 10110
PHONE: (66-2) 713-3888, FAX: (66-2) 713-3889

Project No. : 193018 Date : 11/16/2020
Project Name : ศูนย์ราชการ โซน ซี
Subject : อาคารทิศตะวันออก
Made by : โชคชัย Checked by : โชคชัย

Ref. ST-1A Typical

MATERIAL PROPERTY			
(1) CONCRETE STREGTH(Fc')	=	350	ksc.
(2) YIELD STRENGTH (Fy)	=	4000	ksc.
(3) YIELD STRENGTH (Fv)	=	2400	ksc.

SECTION PROPERTY			
(1) HEIGHT OF STAIR	=	1.80	m.
(2) LANDING SPAN (L1)	=	0.10	m.
(3) STAIR SPAN (L2)	=	3.30	m.
(4) LANDING SPAN (L3)	=	1.90	m.
(5) UP STEP DIST (r)	=	0.150	m.
(6) HOR STEP DIST (s)	=	0.300	m.
(7) ASSUME THICKNESS (t)	=	0.150	m.
(8) COVERING (d')	=	0.025	m.
(9) EFFECTIVE DEPTH (d)	=	0.125	m.

LOADING			
(1) DL.1 OF SLAB	=	402	ksm.
(2) DL.2 STEP OF STAIR	=	180	ksm.
(3) DL.3OF LANDING SLAB	=	360	ksm.
(4) LIVELOAD	=	300	ksm.

LOAD FACTOR	
(1) DEAD LOAD	1.40
(2) LIVE LOAD	1.70

COMPUTATION				
Fc (all)	0.45*Fc'	=	158	ksc.
Fs (all)	0.5*Fy	=	2000	ksc.
SR24	Pmin	=	0.0025	
SD30,40	Pmin	=	0.002	
SD50	Pmin	=	0.0015	
pmax	= 0.75*pb	=	0.0287	
Beta		=	0.8	
w1=1.4*DL1+1.7*LL		=	1014	ksm.
w2=1.4(DL1+DL2)+1.7*LL		=	1325	ksm.
w3=1.4*DL1+1.7*LL		=	1014	ksm.
REACTION (Ra)		=	3376	kg.
REACTION (Rb)		=	3027	kg.
POINT GIVE MAX.MOMENT		=	2.57	m.
MAX MOMENT		=	4376	kg-m.
d		=	7.3	cm.
ρ		=	0.00824	
As	= ρbd	=	10.3	cm.2
Ast	= 0.002*b*t	=	4.50	cm.2

	DESIGN	ACTUAL		CHECK
DESIGN EFFECTIVE DEPTH	12.50	7.25	cm.	O.K.
SHEAR STRESS	5.43	2.70	ksc.	O.K.

MAIN STEEL	DB	10	12	16	20	22	25	mm.
SPACING		7.1	10.5	19.0	30.0	30.0	30.0	cm.
BOND STRESS		14.3	11.9	9.0	7.2	6.5	5.7	ksc.
ALLOWABLE BOND STRESS		11.00	11.00	11.00	11.00	11.00	11.00	
BOND CHECKING		FAIL	FAIL	O.K	O.K	O.K	O.K	
TEMPERATURE STEEL	RB	6	9	12	15			mm.
		5.8	13.6	24.6	30.0			cm.

THICKNESS OF STAIR		15	cm.		
MAIN STEEL	DB	16	SPACING	15	cm.
TEMPERATURE STEEL	RB	9	SPACING	20	cm.

REACTIOPN ON LEFT BEAM (Ra) =	3376	kg/m
REACTIOPN ON RIGTH BEAM (Rb) =	3027	kg/m

KINGDOM OF THAILAND
CHOKCHAI KHATKHAJORN
โชคชัย ขัดขจร
สน. 4522
REGISTERED PROFESSIONAL ENGINEER

Design ST-1A (4-5) Page 1

DYNAMIC ENGINEERING CONSULTANTS CO., LTD.
281 SOI PHANIT ANAN 7 SUKHUMVIT 71
BANGKOK 10110
PHONE: (66-2) 713-3888, FAX: (66-2) 713-3889

Project No. : 193018 Date : 11/16/2020
Project Name : ศูนย์ราชการ โซน ซี
Subject : อาคารทิศตะวันออก
Made by : โชคชัย Checked by : โชคชัย

Ref. ST-1A (4-5)

MATERIAL PROPERTY			
(1) CONCRETE STREGTH(Fc')	=	350	ksc.
(2) YIELD STRENGTH (Fy)	=	4000	ksc.
(3) YIELD STRENGTH (Fv)	=	2400	ksc.

SECTION PROPERTY			
(1) HEIGHT OF STAIR	=	2.15	m.
(2) LANDING SPAN (L1)	=	0.04	m.
(3) STAIR SPAN (L2)	=	3.90	m.
(4) LANDING SPAN (L3)	=	1.70	m.
(5) UP STEP DIST (r)	=	0.165	m.
(6) HOR STEP DIST (s)	=	0.300	m.
(7) ASSUME THICKNESS (t)	=	0.150	m.
(8) COVERING (d')	=	0.025	m.
(9) EFFECTIVE DEPTH (d)	=	0.125	m.

LOADING			
(1) DL.1 OF SLAB	=	411	ksm.
(2) DL.2 STEP OF STAIR	=	198	ksm.
(3) DL.3OF LANDING SLAB	=	360	ksm.
(4) LIVELOAD	=	300	ksm.

LOAD FACTOR	
(1) DEAD LOAD	1.40
(2) LIVE LOAD	1.70

COMPUTATION				
Fc (all)	0.45*Fc'	=	158	ksc.
Fs (all)	0.5*Fy	=	2000	ksc.
SR24	Pmin	=	0.0025	
SD30,40	Pmin	=	0.002	
SD50	Pmin	=	0.0015	
pmax	= 0.75*pb	=	0.0287	
Beta		=	0.8	
w1=1.4*DL1+1.7*LL		=	1014	ksm.
w2=1.4(DL1+DL2)+1.7*LL		=	1362	ksm.
w3=1.4*DL1+1.7*LL		=	1014	ksm.
REACTION (Ra)		=	3739	kg.
REACTION (Rb)		=	3339	kg.
POINT GIVE MAX.MOMENT		=	2.75	m.
MAX MOMENT		=	5168	kg-m.
d		=	7.9	cm.
ρ		=	0.00984	
As	= ρbd	=	12.3	cm.2
Ast	= 0.002*b*t	=	5.38	cm.2

	DESIGN	ACTUAL		CHECK
DESIGN EFFECTIVE DEPTH	12.50	7.88	cm.	O.K.
SHEAR STRESS	5.43	2.99	ksc.	O.K.

MAIN STEEL	DB	10	12	16	20	22	25	mm.
SPACING		5.9	8.7	15.8	25.0	30.0	30.0	cm.
BOND STRESS		15.9	13.2	9.9	7.9	7.2	6.3	ksc.
ALLOWABLE BOND STRESS		11.00	11.00	11.00	11.00	11.00	11.00	
BOND CHECKING		FAIL	FAIL	O.K	O.K	O.K	O.K	
TEMPERATURE STEEL	RB	6	9	12	15			mm.
		4.8	11.3	20.5	30.0			cm.

THICKNESS OF STAIR		15	cm.		
MAIN STEEL	DB	16	SPACING	15	cm.
TEMPERATURE STEEL	RB	9	SPACING	20	cm.

REACTIOPN ON LEFT BEAM (Ra) =	3739	kg/m
REACTIOPN ON RIGTH BEAM (Rb) =	3339	kg/m

KINGDOM OF THAILAND
CHOKCHAI KHATKHAJORN
โชคชัย ขัดขจร
สย. 4522
REGISTERED PROFESSIONAL ENGINEER

Design ST-2 Page 1

DYNAMIC ENGINEERING CONSULTANTS CO., LTD.
281 SOI PHANIT ANAN 7 SUKHUMVIT 71
BANGKOK 10110
PHONE: (66-2) 713-3888, FAX: (66-2) 713-3889

Project No. : 193018 Date : 11/16/2020
Project Name : ศูนย์ราชการ โซน ซี
Subject : อาคารทิศตะวันออก
Made by : โชคชัย Checked by : โชคชัย

Ref. ST-2 (Mezz)

MATERIAL PROPERTY			
(1) CONCRETE STREGTH(Fc')	=	350	ksc.
(2) YIELD STRENGTH (Fy)	=	4000	ksc.
(3) YIELD STRENGTH (Fv)	=	2400	ksc.

SECTION PROPERTY			
(1) HEIGHT OF STAIR	=	1.50	m.
(2) LANDING SPAN (L1)	=	0.01	m.
(3) STAIR SPAN (L2)	=	2.25	m.
(4) LANDING SPAN (L3)	=	0.93	m.
(5) UP STEP DIST (r)	=	0.150	m.
(6) HOR STEP DIST (s)	=	0.250	m.
(7) ASSUME THICKNESS (t)	=	0.150	m.
(8) COVERING (d')	=	0.025	m.
(9) EFFECTIVE DEPTH (d)	=	0.125	m.

LOADING			
(1) DL.1 OF SLAB	=	420	ksm.
(2) DL.2 STEP OF STAIR	=	180	ksm.
(3) DL.3OF LANDING SLAB	=	360	ksm.
(4) LIVELOAD	=	300	ksm.

LOAD FACTOR	
(1) DEAD LOAD	1.40
(2) LIVE LOAD	1.70

COMPUTATION				
Fc (all)	0.45*Fc'	=	158	ksc.
Fs (all)	0.5*Fy	=	2000	ksc.
SR24	Pmin	=	0.0025	
SD30,40	Pmin	=	0.002	
SD50	Pmin	=	0.0015	
pmax	= 0.75*pb	=	0.0287	
Beta		=	0.8	
w1=1.4*DL1+1.7*LL		=	1014	ksm.
w2=1.4(DL1+DL2)+1.7*LL		=	1350	ksm.
w3=1.4*DL1+1.7*LL		=	1014	ksm.
REACTION (Ra)		=	2101	kg.
REACTION (Rb)		=	1884	kg.
POINT GIVE MAX.MOMENT		=	1.56	m.
MAX MOMENT		=	1640	kg-m.
d		=	4.4	cm.
ρ		=	0.00298	
As	= ρbd	=	3.7	cm.2
Ast	= 0.002*b*t	=	3.75	cm.2

	DESIGN	ACTUAL		CHECK
DESIGN EFFECTIVE DEPTH	12.50	4.44	cm.	O.K.
SHEAR STRESS	5.43	1.68	ksc.	O.K.

MAIN STEEL	DB	10	12	16	20	22	25	mm.
SPACING		20.6	29.9	30.0	30.0	30.0	30.0	cm.
BOND STRESS		11.9	9.9	7.4	5.9	5.4	4.8	ksc.
ALLOWABLE BOND STRESS		11.00	11.00	11.00	11.00	11.00	11.00	
BOND CHECKING		FAIL	O.K	O.K	O.K	O.K	O.K	
TEMPERATURE STEEL	RB	6	9	12	15			mm.
		7.0	16.5	29.7	30.0			cm.

THICKNESS OF STAIR		15	cm.		
MAIN STEEL	DB	12	SPACING	20	cm.
TEMPERATURE STEEL	RB	9	SPACING	20	cm.

REACTIOPN ON LEFT BEAM (Ra) =	2101	kg/m
REACTIOPN ON RIGTH BEAM (Rb) =	1884	kg/m

KINGDOM OF THAILAND
CHOKCHAI KHATKHAJORN
โชคชัย ขัดขจร
สย. 4522
REGISTERED PROFESSIONAL ENGINEER

Design ST-3 Page 1

DYNAMIC ENGINEERING CONSULTANTS CO., LTD.
281 SOI PHANIT ANAN 7 SUKHUMVIT 71
BANGKOK 10110
PHONE: (66-2) 713-3888, FAX: (66-2) 713-3889

Project No. : 193018 Date : ########
Project Name : ศูนย์ราชการ โซน ซี
Subject : อาคารทิศตะวันออก
Made by : โชคชัย Checked by : โชคชัย

Ref. ST-3

MATERIAL PROPERTY			
(1) CONCRETE STREGTH(Fc')	=	350	ksc.
(2) YIELD STRENGTH (Fy)	=	4000	ksc.
(3) YIELD STRENGTH (Fv)	=	2400	ksc.

SECTION PROPERTY			
(1) HEIGHT OF STAIR	=	1.50	m.
(2) LANDING SPAN (L1)	=	0.01	m.
(3) STAIR SPAN (L2)	=	2.25	m.
(4) LANDING SPAN (L3)	=	0.01	m.
(5) UP STEP DIST (r)	=	0.150	m.
(6) HOR STEP DIST (s)	=	0.250	m.
(7) ASSUME THICKNESS (t)	=	0.150	m.
(8) COVERING (d')	=	0.025	m.
(9) EFFECTIVE DEPTH (d)	=	0.125	m.

LOADING			
(1) DL.1 OF SLAB	=	420	ksm.
(2) DL.2 STEP OF STAIR	=	180	ksm.
(3) DL.3OF LANDING SLAB	=	360	ksm.
(4) LIVELOAD	=	400	ksm.

LOAD FACTOR	
(1) DEAD LOAD	1.40
(2) LIVE LOAD	1.70

COMPUTATION				
Fc (all)	0.45*Fc'	=	158	ksc.
Fs (all)	0.5*Fy	=	2000	ksc.
SR24	Pmin	=	0.0025	
SD30,40	Pmin	=	0.002	
SD50	Pmin	=	0.0015	
pmax	= 0.75*pb	=	0.0287	
Beta		=	0.8	
w1=1.4*DL1+1.7*LL		=	1184	ksm.
w2=1.4(DL1+DL2)+1.7*LL		=	1520	ksm.
w3=1.4*DL1+1.7*LL		=	1184	ksm.
REACTION (Ra)		=	1722	kg.
REACTION (Rb)		=	1722	kg.
POINT GIVE MAX.MOMENT		=	1.14	m.
MAX MOMENT		=	979	kg-m.
d		=	3.4	cm.
ρ		=	0.00176	
As	= ρbd	=	2.2	cm.2
Ast	= 0.002*b*t	=	3.75	cm.2

	DESIGN	ACTUAL		CHECK
DESIGN EFFECTIVE DEPTH	12.50	3.43	cm.	O.K.
SHEAR STRESS	5.43	1.38	ksc.	O.K.

MAIN STEEL	DB	10	12	16	20	22	25	mm.
SPACING		30.0	30.0	30.0	30.0	30.0	30.0	cm.
BOND STRESS		9.7	8.1	6.1	4.9	4.4	3.9	ksc.
ALLOWABLE BOND STRESS		11.00	11.00	11.00	11.00	11.00	11.00	
BOND CHECKING		O.K	O.K	O.K	O.K	O.K	O.K	
TEMPERATURE STEEL	RB	6	9	12	15			mm.
		7.0	16.5	29.7	30.0			cm.

THICKNESS OF STAIR		15	cm.		
MAIN STEEL	DB	12	SPACING	20	cm.
TEMPERATURE STEEL	RB	9	SPACING	20	cm.

REACTIOPN ON LEFT BEAM (Ra) =	1722	kg/m
REACTIOPN ON RIGTH BEAM (Rb) =	1722	kg/m

KINGDOM OF THAILAND
CHOKCHAI KHATKHAJORN
โชคชัย ขัดขจร
สย. 4522
REGISTERED PROFESSIONAL ENGINEER

DYNAMIC ENGINEERING CONSULTANTS CO., LTD.
281 SOI PHANIT ANAN 7 SUKHUMVIT 71
BANGKOK 10110
PHONE: (66-2) 713-3888, FAX: (66-2) 713-3889

Project No.	: 193018	Date :	11/16/2020
Project Name	: อาคารทิศตะวันออก		
Subject	: LANDSCAPE บนบ่อหน่วง		
Made by	: โชคชัย	Checked by :	โชคชัย

Member : WL 1 **SLAB DESIGN (USD)**

Pile Size	=	0.00	cm.	Conc. fc'		350	kg / cm^2		
Hight, H	=	2.00	m.	Steel fy		4000	kg / cm^2		
Water Load	=	0	kg / m^2	β_1	=	0.80	R =	73.57	kg / cm^2
Soil Load	=	1800	kg / m^2	ρ_b	=	0.036	ϕM_n =	6621	kg-m / m
W_U = 1.4W	=	3024	kg / m^2	Cover (Short Side)			=	5.00	cm
Thickness	=	15.0	cm	Cover (Long Side)			=	5.00	cm
M-pos.	=	806	kg-m / m	Required Thickness			=	8.49	cm
Max. Shear	=	3024	kg / m	Required d			=	3.49	cm

Reinforcement

ρ = 0.85*(fc' / fy) * (1-(SQR(1-(236*Mu/(ϕbd^{2}fc'))))

= 0.0023

Section Area of Steel

As.pos. = 3.42 (cm^2 / m)

As_{min} = 2.70 (cm^2 / m)

Temparature Steel

As. = 2.70 (cm^2 / m)

Bottom Steel As-pos.		Top Steel As-neg.	
Diameter (mm.)	Spacing(m.)	Diameter (mm.)	Spacing(m.)
9	0.19	9	0.24
12	0.33	12	0.42
15	0.52	15	0.65
19	0.83	19	1.05
Use Diameter =	9 mm.	Use Diameter =	9 mm.

Check Beam Shear :

V_U = 3024 kg / m

ϕV_c = 8428 kg / m OK

Check Punching Shear

V_{up} = 3024 kg / m

ϕV_p = 3371 kg / m OK

KINGDOM OF THAILAND
CHOKCHAI KHATKHAJORN
โชคชัย ขัดขจร
สน. 4522
REGISTERED PROFESSIONAL ENGINEER

DYNAMIC ENGINEERING CONSULTANT CO., LTD.

ONE WAY SLAB

(Ultimate Stress Design method in accordance with ACI 318-89)

Job No.	:	193018
Rev.	:	0
Initial	:	CKJ
Date	:	13-Nov-20

Slab No. SL-1

Project : อาคารด้านทิศตะวันอะ landscapeบนบ่อหน่วง

filename : 1 Slab

Concrete Strength	fc' =	350	[kg/cm²]	
	fy SD =	4000	[kg/cm²]	
	fy RD =	2400	[kg/cm²]	
Clear span Length	Ln =	275	[cm]	
Load	LL =	400	[kg/ m]	
Type of Slab	Simple Support			
Reinforcement Steel	RB9			

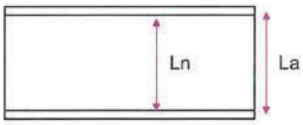

	DL	360	[kg/ m]
Thick of Slab	h =	15	[cm]
	Wu =	1184	[kg/ m]
Moment	- Mu L =	373	[kg-m]
	+ Mu m =	1119	[kg-m]
	- Mu R =	373	[kg-m]
Shear	Vur =	1872	[kg]
	K =	0.80	
	ϕ =	0.90	
	ρ =	0.0712	
	ρ_{max} =	0.0534	
	d =	3.5	[cm] ($Mu / \phi \rho fy db^2 (1-0.59 r fy / fc')$)$^{0.5}$

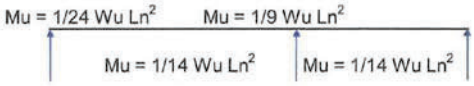

Vur =1.15Wu Ln /2

d < h OK

Sheck Shear

Existing Unit Shear	vc =	1.63	[kg/cm²]
Allowable Shear unit	v all =	8.92	[kg/cm²]
	vc < v all	OK	
	a try =	0.3694	[cm]
	As =	4.579	[cm²]
	a =	0.3694	[cm]
	j d =	14.82	[cm]

Check Deflection

Δ all =	0.76	[cm]	
ρ fy =	6.0 <	35	[kg/cm²]
I =	28125	[cm⁴]	
Ec =	284116	[kg/cm²]	
Δ =	0.11 [cm] <	Δ all	OK
LL = 40 % and Cofficient =	2		
Δ Time =	0.1 <	Δ all	OK

Moment arm

$Mu / \phi fy j$	- Mu L	As L =	1.17	[cm²]	2 RB9	@ 0.150	OK
	+ Mu m	As m =	3.50	[cm²]	6 RB9	@ 0.150	OK
	- Mu R	As R =	1.17	[cm²]	2 RB9	@ 0.150	OK
Minmum Steel		As min =	3.75	[cm²]	6 RB9	@ 0.150	OK

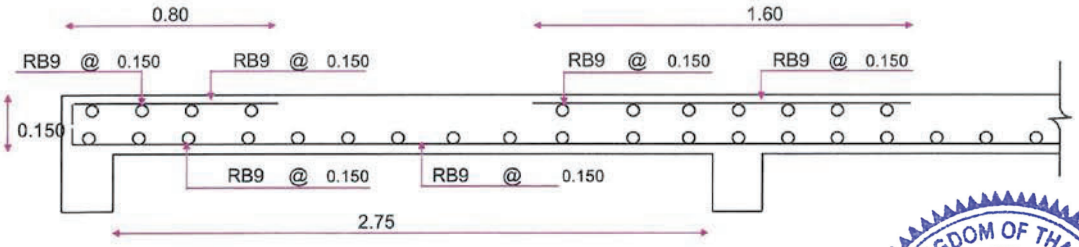

One Way Slab (0.15)

KINGDOM OF THAILAND
CHOKCHAI KHATKHAJORN
โชคชัย ขัดขจร
สย. 4522
REGISTERED PROFESSIONAL ENGINEER

DYNAMIC ENGINEERING CONSULTANT CO., LTD.

Job No.	:	193018
Rev.	:	0
Initial	:	CKJ
Date	:	13-Nov-20

TWO WAY SLAB

(Ultimate Stress Design method in accordance with ACI 318-89)

(Method 2)

Slab No. SL-2

Project : อาคารด้านทิศตะวันออก โซน ซี Landscape บนบ่อหน่วง Filename : Slab S

Concrete Strength	fc'	=	350	[kg/cm²]
	fy SD	=	4000	[kg/cm²]
	fy RD	=	2400	[kg/cm²]
Thick of Slab	h	=	15	[cm]
Clear span Length	La	=	300	[cm]
	Lb	=	300	[cm]
Live Load	LL	=	1200	[kg/m²]
Finishing Load	FL	=	0	[kg/m²]

4 Siden Continuous | RB9

	DL	=	360	[kg/ m]
	k	=	0.80	
	ϕ bend	=	0.90	
	ϕ Shear	=	0.85	
Cover (Short Side)	Cc	=	3.0	[cm]
Depth of Slab	d	=	12.0	[cm]
	Wu	=	2544	[kg/ m]
	Lb/La	=	1.00	OK
La/Lb	m	=	1.000	
Shear	Vu S	=	2544	[kg/m]
	Vu L	=	2544	[kg/m]
	Vc all	=	7164	[kg/m]

Vu L < Vc all OK

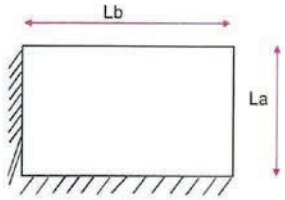

Check h	ρ	=	0.0712	
	ρ_{max}	=	0.0534	
Required d		=	3.1	[cm]

(Mu / ϕ ρ fy db² (1-0.59 ρ fy / fc'))^0.5

d < 12.0 OK

a try	=	0	[cm]
As	=	3.395	[cm²]
a	=	0.2739	[cm]
Moment arm j d	=	11.86	[cm]

Short Span

Mu / ϕ fy j d

Moment	- Continue Mu	=	756	[kg-m]	As1	=	2.95	[cm²]	5 RB9	@	0.150	OK
	- Not Cont. Mu	=	0	[kg-m]	As2	=	0.00	[cm²]	1 RB9	@	0.150	OK
	+ Middle Mu m	=	572	[kg-m]	As3	=	2.23	[cm²]	4 RB9	@	0.150	OK

Long Span

Moment	- Continue Mu	=	870	[kg-m]	As4	=	3.40	[cm²]	6 RB9	@	0.150	OK
	- Not Cont. Mu	=	0	[kg-m]	As5	=	0.00	[cm²]	1 RB9	@	0.150	OK
	+ Middle Mu m	=	572	[kg-m]	As6	=	2.23	[cm²]	4 RB9	@	0.150	OK
	Minimum Steel				As min	=	3.75	[cm²]	6 RB9	@	0.150	OK

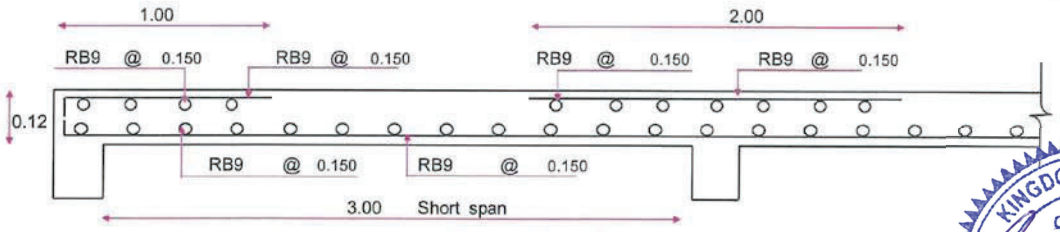

Two Way Slab (0.15)

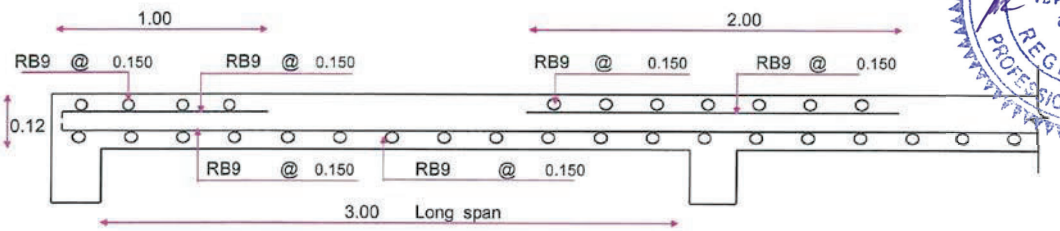

Two Way Slab (0.15)

KINGDOM OF THAILAND
CHOKCHAI KHATKHAJORN
โชคชัย ขัดขจร
สย. 4522
REGISTERED PROFESSIONAL ENGINEER

DYNAMIC ENGINEERING CONSULTANT CO., LTD.

ONE WAY SLAB

(Ultimate Stress Design method in accordance with ACI 318-89)

Job No.	:	193018
Rev.	:	0
Initial	:	CKJ
Date	:	13-Nov-20

Slab No. RPL-1

Project : อาคารด้านทิศตะวันอะ landscapeบนบ่อหน่วง filename : 1 Slab

Concrete Strength	fc'	=	350	[kg/cm²]
	fy SD	=	4000	[kg/cm²]
	fy RD	=	2400	[kg/cm²]
Clear span Length	Ln	=	180	[cm]
Load	LL	=	400	[kg/ m]
Type of Slab	Simple Support			
Reinforcement Steel	RB9			

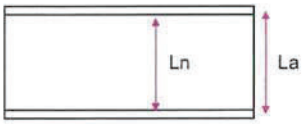

	DL		360	[kg/ m]
Thick of Slab	h	=	15	[cm]
	Wu	=	1184	[kg/ m]
Moment	- Mu L	=	160	[kg-m]
	+ Mu m	=	480	[kg-m]
	- Mu R	=	160	[kg-m]
Shear	Vur	=	1225	[kg]
	K	=	0.80	
	ϕ	=	0.90	
	ρ	=	0.0712	
	ρ_{max}	=	0.0534	
	d	=	2.3	[cm] ($Mu / \phi \rho fy db^2 (1-0.59 r fy / fc')$)$^{0.5}$

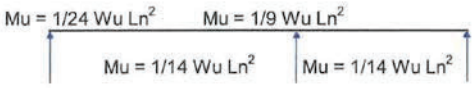

Vur =1.15Wu Ln /2

d < h OK

Sheck Shear

Existing Unit Shear	vc	=	1.07	[kg/cm²]
Allowable Shear unit	v all	=	8.92	[kg/cm²]
	vc	<	v all	OK
	a try	=	0.1568	[cm]
	As	=	1.944	[cm²]
	a	=	0.1568	[cm]
	j d	=	14.92	[cm]

Check Deflection

Δ all	=	0.50	[cm]	
ρ fy	=	6.0 <	35	[kg/cm²]
I	=	28125	[cm⁴]	
Ec	=	284116	[kg/cm²]	
Δ	=	0.02 [cm] <	Δ all	OK
LL = 40 % and Cofficient =			2	
Δ Time	=	0.02 <	Δ all	OK

Moment arm

$Mu / \phi fy j$	- Mu L	As L =	0.50	[cm²]	1 RB9	@	0.150	OK
	+ Mu m	As m =	1.49	[cm²]	3 RB9	@	0.150	OK
	- Mu R	As R =	0.50	[cm²]	1 RB9	@	0.150	OK
Minmum Steel		As min =	3.75	[cm²]	6 RB9	@	0.150	OK

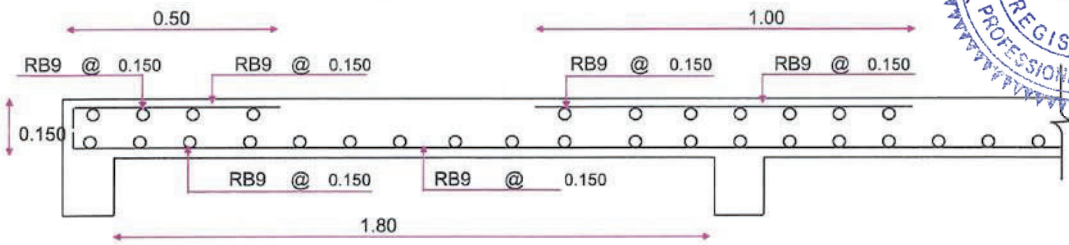

KINGDOM OF THAILAND
CHOKCHAI KHATKHAJORN
โชคชัย ขัดขจร
สย. 4522
REGISTERED PROFESSIONAL ENGINEER

One Way Slab (0.15)

DYNAMIC ENGINEERING CONSULTANT CO., LTD.		Job No.	193018
Design Reinforced Concrete Beam		Rev.	1
(Ultimate Stress Design method in accordance with ACI 318-89)		Initial	CKJ
Beam No.	BL-1	Date	13-Nov-20
Project :	อาคารทิศตะวันออก	File	Beam B

	fc'	=	350	[kg/cm^2]
	fy SD	=	4000	[kg/cm^2]
	fy SR	=	2400	[kg/cm^2]
$M_{pos.}$	Mu^+	=	4084	[kg-m]
$M_{neg.}$	Mu^-	=	4084	[kg-m]
$V_{max.}$	Vu	=	4800	[kg]
	DL	=	1640	[kg/m]
	LL	=	1360	[kg/m]
Length	Ln	=	330	[cm]
width	b	=	20	[cm]
depth	t	=	40	[cm]
	d'	=	5	[cm]
siding	d"	=	3.5	[cm]

For Positive Moment :

Upper Steel: DB 12
Lower Steel: DB 12
Stirrup Steel: RB 9

d	=	35	[cm]
a try	=	2.2514	[cm]
As	=	3.349	[cm^2]
a	=	**2.2514**	[cm]
ϕ Bend	=	0.90	
ϕ Shea	=	0.85	
k1	=	0.80	
Es	=	2040000	[kg/cm^2]
Ec	=	284553	[kg/cm^2]
n	=	7	
ρ	=	0.0360	
ρ_{max}	=	0.0270	
As	=	18.887	[cm^2]
a	=	12.697	[cm]
Mu	=	19481	[kg-m]
M1	=	0	[kg-m]
As'	=	0.0000	[cm^2]
No. of steel	=	**2**	
As	=	2.26	[cm^2]
Σ As	=	3.349	[cm^2]
No. of steel	=	**3**	
As	=	3.39	[cm^2]

Section OK

Stirrup Design

$0.53\,\phi\,(fc')^{0.5}\,bd$	=	6247	[kg]
L=Ln/2(Vu - ϕ Vc)/Vu	=	-17.5	[cm]
S	=	-62.795	[cm]

Used Stirrup RB 9 @ #N/A #N/A

For Negative Moment :

Upper Steel: DB 12
Lower Steel: DB 12
Stirrup Steel: RB 9

d	=	35	[cm]
a try	=	8.7110	[cm]
As	=	3.349	[cm^2]
a	=	**2.2514**	[cm]
ϕ Bend	=	0.90	
ϕ Shea	=	0.85	
k1	=	1.05	
Es	=	2040000	[kg/cm^2]
Ec	=	284553	[kg/cm^2]
n	=	7	
ρ	=	0.0472	
ρ_{max}	=	0.0354	
As	=	24.789	[cm^2]
a	=	16.665	[cm]
Mu	=	23798	[kg-m]
M1	=	0	[kg-m]
As'	=	0.0000	[cm^2]
No. of steel	=	**2**	
As	=	2.26	[cm^2]
Σ As	=	3.349	[cm^2]
No. of steel	=	**3**	
As	=	3.39	[cm^2]

Section OK

Check Deflection

Δ all	=	0.92	[cm]		
ρ fy	=	19	<	35	[kg/cm^2]
Y'	=	8.01			
I	=	71458	[cm^4]		
Ec	=	284116	[kg/cm^2]		
Δ	=	0.23	[cm] <	Δ all	OK
Δ Time	=	0.08	<	Δ all	OK

KINGDOM OF THAILAND
CHOKCHAI KHATKHAJORN
โชคชัย ขัดขจร
สย. 4522
REGISTERED PROFESSIONAL ENGINEER

DYNAMIC ENGINEERING CONSULTANT CO., LTD.		Job No.	193018
Design Reinforced Concrete Beam		Rev.	1
(Ultimate Stress Design method in accordance with ACI 318-89)		Initial	CKJ
Beam No.	BL-1	Date	13-Nov-20
Project :	อาคารทิศตะวันออก	File	Beam B

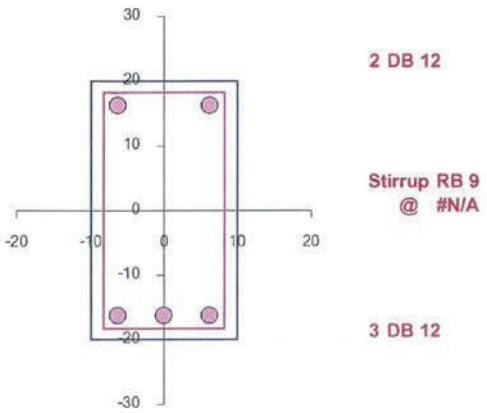

Positive Section

BL-1 (20 X 40)

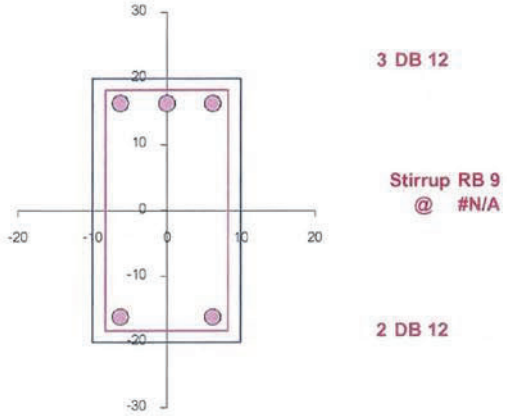

Negative Section

BL-1 (20 X 40)

KINGDOM OF THAILAND
CHOKCHAI KHATKHAJORN
โชคชัย ขัดขจร
สย. 4522
REGISTERED PROFESSIONAL ENGINEER

Design ST-1 Page 1

DYNAMIC ENGINEERING CONSULTANTS CO., LTD.
281 SOI PHANIT ANAN 7 SUKHUMVIT 71
BANGKOK 10110
PHONE: (66-2) 713-3886, FAX: (66-2) 713-3889

Project No. : 193018 Date : 11/13/2020
Project Name : ศูนย์ราชการ โซน ซี
Subject : อาคารทิศตะวันออก
Made by : โชคชัย Checked by : โชคชัย

Ref. STL-1

1.2

MATERIAL PROPERTY			
(1) CONCRETE STREGTH(Fc')	=	350	ksc.
(2) YIELD STRENGTH (Fy)	=	4000	ksc.
(3) YIELD STRENGTH (Fv)	=	2400	ksc.

SECTION PROPERTY			
(1) HEIGHT OF STAIR	=	1.20	m.
(2) LANDING SPAN (L1)	=	0.01	m.
(3) STAIR SPAN (L2)	=	3.00	m.
(4) LANDING SPAN (L3)	=	0.10	m.
(5) UP STEP DIST (r)	=	0.150	m.
(6) HOR STEP DIST (s)	=	0.450	m.
(7) ASSUME THICKNESS (t)	=	0.150	m.
(8) COVERING (d')	=	0.025	m.
(9) EFFECTIVE DEPTH (d)	=	0.125	m.

LOADING			
(1) DL.1 OF SLAB	=	379	ksm.
(2) DL.2 STEP OF STAIR	=	180	ksm.
(3) DL.3OF LANDING SLAB	=	360	ksm.
(4) LIVELOAD	=	400	ksm.

LOAD FACTOR	
(1) DEAD LOAD	1.40
(2) LIVE LOAD	1.70

COMPUTATION				
Fc (all)	0.45*Fc'	=	158	ksc.
Fs (all)	0.5*Fy	=	2000	ksc.
SR24	Pmin	=	0.0025	
SD30,40	Pmin	=	0.002	
SD50	Pmin	=	0.0015	
pmax	= 0.75*pb	=	0.0287	
Beta		=	0.8	
w1=1.4*DL1+1.7*LL		=	1184	ksm.
w2=1.4(DL1+DL2)+1.7*LL		=	1463	ksm.
w3=1.4*DL1+1.7*LL		=	1184	ksm.
REACTION (Ra)		=	2272	kg.
REACTION (Rb)		=	2248	kg.
POINT GIVE MAX.MOMENT		=	1.55	m.
MAX MOMENT		=	1768	kg-m.
d		=	4.6	cm.
ρ		=	0.00321	
As	= ρbd	=	4.0	cm.2
Ast	= 0.002*b*t	=	3.00	cm.2

	DESIGN	ACTUAL		CHECK
DESIGN EFFECTIVE DEPTH	12.50	4.61	cm.	O.K.
SHEAR STRESS	5.43	1.82	ksc.	O.K.

MAIN STEEL	RB	9	12	16	20	22	25	mm.
SPACING		15.3	27.7	30.0	30.0	30.0	30.0	cm.
BOND STRESS		10.7	8.0	6.0	4.8	4.4	3.9	ksc.
ALLOWABLE BOND STRESS		11.00	11.00	11.00	11.00	11.00	11.00	
BOND CHECKING		O.K	O.K	O.K	O.K	O.K	O.K	
TEMPERATURE STEEL	RB	6	9	12	15			mm.
		8.9	20.7	30.0	30.0			cm.

THICKNESS OF STAIR		15	cm.		
MAIN STEEL	RB	9	SPACING	15	cm.
TEMPERATURE STEEL	RB	9	SPACING	15	cm.

REACTIOPN ON LEFT BEAM (Ra) =	2272	kg/m
REACTIOPN ON RIGTH BEAM (Rb) =	2248	kg/m

KINGDOM OF THAILAND
CHOKCHAI KHATKHAJORN
โชคชัย ขัดขจร
สน. 4522
REGISTERED PROFESSIONAL ENGINEER

7. รายการคำนวณ โครงสร้างเหล็ก

KINGDOM OF THAILAND
CHOKCHAI KHATKHAJORN
โชคชัย ขัดขจร
สย. 4522
REGISTERED PROFESSIONAL ENGINEER

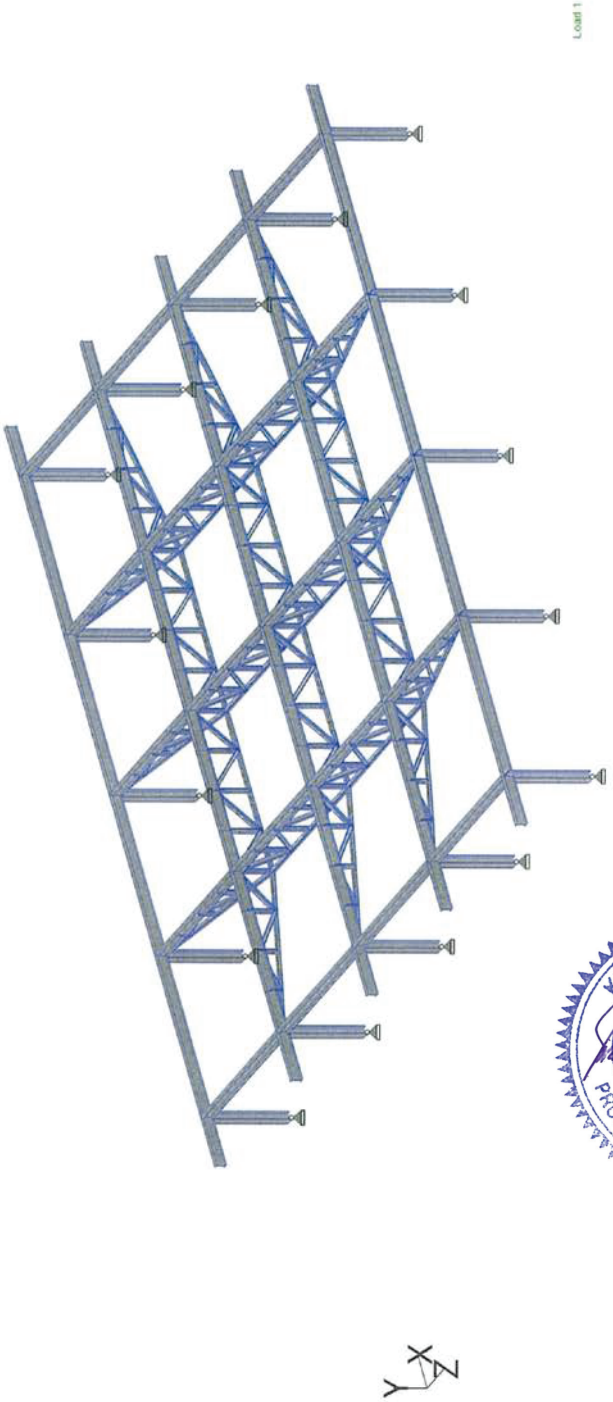

KINGDOM OF THAILAND
CHOKCHAI
KHATKHAJORN
โชคชัย ขัดขจร
สย. 4522
REGISTERED
PROFESSIONAL ENGINEER

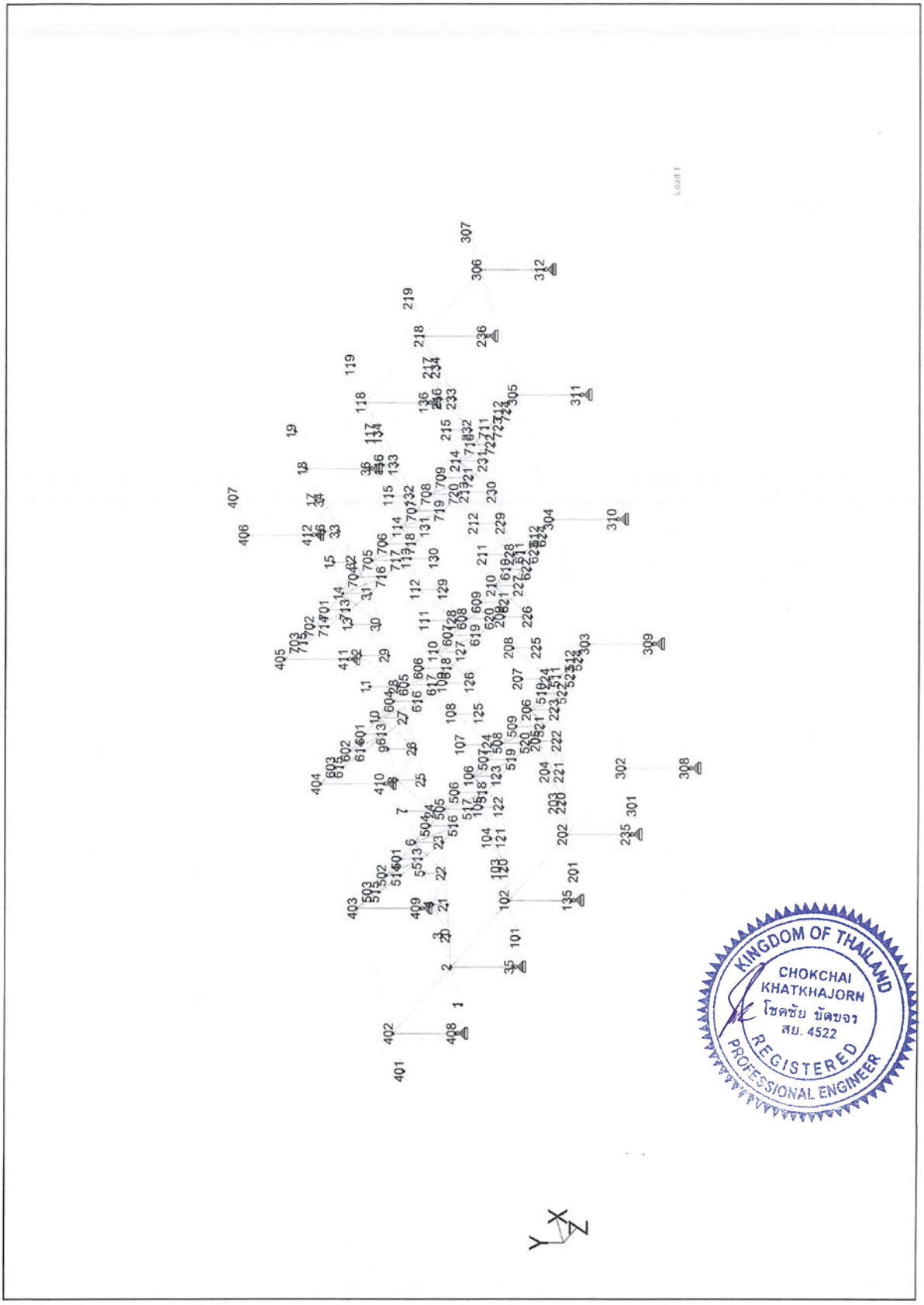
Load 1
KINGDOM OF THAILAND
CHOKCHAI
KHATKHAJORN
โชคชัย ขัดขจร
สย. 4522
REGISTERED
PROFESSIONAL ENGINEER

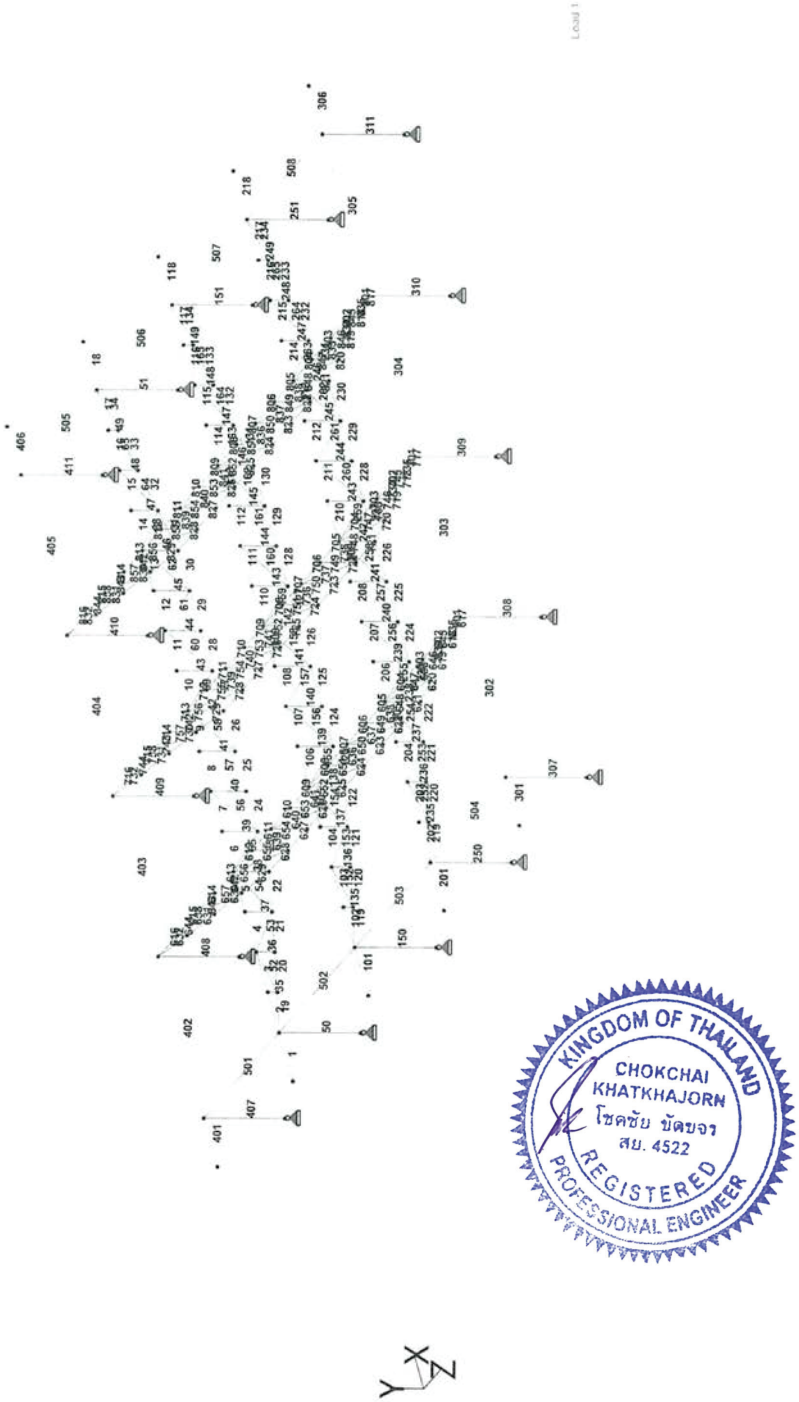
Load 1
KINGDOM OF THAILAND
CHOKCHAI
KHATKHAJORN
โชคชัย ขัดขจร
สย. 4522
REGISTERED
PROFESSIONAL ENGINEER

Job Information

	Engineer	Checked	Approved
Name:	Noppadon	Santi	Santi
Date:	2-Feb-15	3-Feb-15	3-Feb-15

Structure Type	SPACE FRAME

Number of Nodes	204	Highest Node	724
Number of Elements	399	Highest Beam	858

Number of Basic Load Cases	3
Number of Combination Load Cases	2

Included in this printout are data for:

All	The Whole Structure

Included in this printout are results for load cases:

Type	L/C	Name
Primary	1	(DEAD LOAD - DL)
Primary	2	(LIVE LOAD - LL)
Primary	3	(WIND LOAD - WL)
Combination	4	(DL+LL)
Combination	5	0.75(DL+LL+WL)

Nodes

Node	X (m)	Y (m)	Z (m)
1	0.000	0.000	0.000
2	1.500	0.000	0.000
3	2.750	0.000	0.000
4	4.000	0.000	0.000
5	5.250	0.000	0.000
6	6.500	0.000	0.000
7	7.750	0.000	0.000
8	9.000	0.000	0.000
9	10.250	0.000	0.000
10	11.500	0.000	0.000
11	12.750	0.000	0.000
12	14.000	0.000	0.000
13	15.250	0.000	0.000
14	16.500	0.000	0.000
15	17.750	0.000	0.000
16	19.000	0.000	0.000
17	20.250	0.000	0.000
18	21.500	0.000	0.000
19	23.000	0.000	0.000
20	2.750	-0.300	0.000
21	4.000	-0.567	0.000
22	5.250	-0.833	0.000
23	6.500	-1.100	0.000
24	7.750	-1.100	0.000
25	9.000	-1.100	0.000
26	10.250	-1.100	0.000
27	11.500	-1.100	0.000
28	12.750	-1.100	0.000
29	14.000	-1.100	0.000
30	15.250	-1.100	0.000
31	16.500	-1.100	0.000
32	17.750	-0.833	0.000

KINGDOM OF THAILAND
CHOKCHAI KHATKHAJORN
โชคชัย ขัตขจร
สน. 4522
REGISTERED
PROFESSIONAL ENGINEER

Nodes Cont...

Node	X (m)	Y (m)	Z (m)
33	19.000	-0.567	0.000
34	20.250	-0.300	0.000
35	1.500	-2.500	0.000
36	21.500	-2.500	0.000
101	0.000	0.000	4.600
102	1.500	0.000	4.600
103	2.750	0.000	4.600
104	4.000	0.000	4.600
105	5.250	0.000	4.600
106	6.500	0.000	4.600
107	7.750	0.000	4.600
108	9.000	0.000	4.600
109	10.250	0.000	4.600
110	11.500	0.000	4.600
111	12.750	0.000	4.600
112	14.000	0.000	4.600
113	15.250	0.000	4.600
114	16.500	0.000	4.600
115	17.750	0.000	4.600
116	19.000	0.000	4.600
117	20.250	0.000	4.600
118	21.500	0.000	4.600
119	23.000	0.000	4.600
120	2.750	-0.300	4.600
121	4.000	-0.567	4.600
122	5.250	-0.833	4.600
123	6.500	-1.100	4.600
124	7.750	-1.100	4.600
125	9.000	-1.100	4.600
126	10.250	-1.100	4.600
127	11.500	-1.100	4.600
128	12.750	-1.100	4.600
129	14.000	-1.100	4.600
130	15.250	-1.100	4.600
131	16.500	-1.100	4.600
132	17.750	-0.833	4.600
133	19.000	-0.567	4.600
134	20.250	-0.300	4.600
135	1.500	-2.500	4.600
136	21.500	-2.500	4.600
201	0.000	0.000	9.200
202	1.500	0.000	9.200
203	2.750	0.000	9.200
204	4.000	0.000	9.200
205	5.250	0.000	9.200
206	6.500	0.000	9.200
207	7.750	0.000	9.200
208	9.000	0.000	9.200
209	10.250	0.000	9.200
210	11.500	0.000	9.200
211	12.750	0.000	9.200
212	14.000	0.000	9.200
213	15.250	0.000	9.200
214	16.500	0.000	9.200
215	17.750	0.000	9.200
216	19.000	0.000	9.200
217	20.250	0.000	9.200
218	21.500	0.000	9.200
219	23.000	0.000	9.200

Nodes Cont...

Node	X (m)	Y (m)	Z (m)
519	6.500	-1.100	5.750
520	6.500	-1.100	6.900
521	6.500	-1.100	8.050
522	6.500	-0.833	10.350
523	6.500	-0.567	11.500
524	6.500	-0.300	12.650
601	11.500	0.000	-1.150
602	11.500	0.000	-2.300
603	11.500	0.000	-3.450
604	11.500	0.000	1.150
605	11.500	0.000	2.300
606	11.500	0.000	3.450
607	11.500	0.000	5.750
608	11.500	0.000	6.900
609	11.500	0.000	8.050
610	11.500	0.000	10.350
611	11.500	0.000	11.500
612	11.500	0.000	12.650
613	11.500	-0.833	-1.150
614	11.500	-0.567	-2.300
615	11.500	-0.300	-3.450
616	11.500	-1.100	1.150
617	11.500	-1.100	2.300
618	11.500	-1.100	3.450
619	11.500	-1.100	5.750
620	11.500	-1.100	6.900
621	11.500	-1.100	8.050
622	11.500	-0.833	10.350
623	11.500	-0.567	11.500
624	11.500	-0.300	12.650
701	16.500	0.000	-1.150
702	16.500	0.000	-2.300
703	16.500	0.000	-3.450
704	16.500	0.000	1.150
705	16.500	0.000	2.300
706	16.500	0.000	3.450
707	16.500	0.000	5.750
708	16.500	0.000	6.900
709	16.500	0.000	8.050
710	16.500	0.000	10.350
711	16.500	0.000	11.500
712	16.500	0.000	12.650
713	16.500	-0.833	-1.150
714	16.500	-0.567	-2.300
715	16.500	-0.300	-3.450
716	16.500	-1.100	1.150
717	16.500	-1.100	2.300
718	16.500	-1.100	3.450
719	16.500	-1.100	5.750
720	16.500	-1.100	6.900
721	16.500	-1.100	8.050
722	16.500	-0.833	10.350
723	16.500	-0.567	11.500
724	16.500	-0.300	12.650

Nodes Cont...

Node	X (m)	Y (m)	Z (m)
220	2.750	-0.300	9.200
221	4.000	-0.567	9.200
222	5.250	-0.833	9.200
223	6.500	-1.100	9.200
224	7.750	-1.100	9.200
225	9.000	-1.100	9.200
226	10.250	-1.100	9.200
227	11.500	-1.100	9.200
228	12.750	-1.100	9.200
229	14.000	-1.100	9.200
230	15.250	-1.100	9.200
231	16.500	-1.100	9.200
232	17.750	-0.833	9.200
233	19.000	-0.567	9.200
234	20.250	-0.300	9.200
235	1.500	-2.500	9.200
236	21.500	-2.500	9.200
301	0.000	0.000	13.800
302	1.500	0.000	13.800
303	6.500	0.000	13.800
304	11.500	0.000	13.800
305	16.500	0.000	13.800
306	21.500	0.000	13.800
307	23.000	0.000	13.800
308	1.500	-2.500	13.800
309	6.500	-2.500	13.800
310	11.500	-2.500	13.800
311	16.500	-2.500	13.800
312	21.500	-2.500	13.800
401	0.000	0.000	-4.600
402	1.500	0.000	-4.600
403	6.500	0.000	-4.600
404	11.500	0.000	-4.600
405	16.500	0.000	-4.600
406	21.500	0.000	-4.600
407	23.000	0.000	-4.600
408	1.500	-2.500	-4.600
409	6.500	-2.500	-4.600
410	11.500	-2.500	-4.600
411	16.500	-2.500	-4.600
412	21.500	-2.500	-4.600
501	6.500	0.000	-1.150
502	6.500	0.000	-2.300
503	6.500	0.000	-3.450
504	6.500	0.000	1.150
505	6.500	0.000	2.300
506	6.500	0.000	3.450
507	6.500	0.000	5.750
508	6.500	0.000	6.900
509	6.500	0.000	8.050
510	6.500	0.000	10.350
511	6.500	0.000	11.500
512	6.500	0.000	12.650
513	6.500	-0.833	-1.150
514	6.500	-0.567	-2.300
515	6.500	-0.300	-3.450
516	6.500	-1.100	1.150
517	6.500	-1.100	2.300
518	6.500	-1.100	3.450

KINGDOM OF THAILAND
CHOKCHAI KHATKHAJORN
โชคชัย ขัจจอร
สน. 4522
REGISTERED PROFESSIONAL ENGINEER

Beams

Beam	Node A	Node B	Length (m)	Property	β (degrees)
1	1	2	1.500	1	0
2	2	3	1.250	1	0
3	3	4	1.250	1	0
4	4	5	1.250	1	0
5	5	6	1.250	1	0
6	6	7	1.250	1	0
7	7	8	1.250	1	0
8	8	9	1.250	1	0
9	9	10	1.250	1	0
10	10	11	1.250	1	0
11	11	12	1.250	1	0
12	12	13	1.250	1	0
13	13	14	1.250	1	0
14	14	15	1.250	1	0
15	15	16	1.250	1	0
16	16	17	1.250	1	0
17	17	18	1.250	1	0
18	18	19	1.500	1	0
19	2	20	1.285	2	0
20	20	21	1.278	2	0
21	21	22	1.278	2	0
22	22	23	1.278	2	0
23	23	24	1.250	2	0
24	24	25	1.250	2	0
25	25	26	1.250	2	0
26	26	27	1.250	2	0
27	27	28	1.250	2	0
28	28	29	1.250	2	0
29	29	30	1.250	2	0
30	30	31	1.250	2	0
31	31	32	1.278	2	0
32	32	33	1.278	2	0
33	33	34	1.278	2	0
34	34	18	1.285	2	0
35	3	20	0.300	2	0
36	4	21	0.567	2	0
37	5	22	0.833	2	0
38	6	23	1.100	2	0
39	7	24	1.100	2	0
40	8	25	1.100	2	0
41	9	26	1.100	2	0
42	10	27	1.100	2	0
43	11	28	1.100	2	0
44	12	29	1.100	2	0
45	13	30	1.100	2	0
46	14	31	1.100	2	0
47	15	32	0.833	2	0
48	16	33	0.567	2	0
49	17	34	0.300	2	0
50	35	2	2.500	3	0
51	18	36	2.500	3	0
52	20	4	1.285	4	0
53	4	22	1.502	4	0
54	22	6	1.502	4	0
55	6	24	1.665	4	0
56	24	8	1.665	4	0
57	8	26	1.665	4	0
58	26	10	1.665	4	0
59	10	28	1.665	4	0

KINGDOM OF THAILAND
CHOKCHAI KHATKHAJORN
โชคชัย ขัตขจร
สน. 4522
REGISTERED PROFESSIONAL ENGINEER

Beams Cont...

Beam	Node A	Node B	Length (m)	Property	β (degrees)
60	28	12	1.665	4	0
61	12	30	1.665	4	0
62	30	14	1.665	4	0
63	14	32	1.502	4	0
64	32	16	1.502	4	0
65	16	34	1.285	4	0
101	101	102	1.500	5	0
102	102	103	1.250	5	0
103	103	104	1.250	5	0
104	104	105	1.250	5	0
105	105	106	1.250	5	0
106	106	107	1.250	5	0
107	107	108	1.250	5	0
108	108	109	1.250	5	0
109	109	110	1.250	5	0
110	110	111	1.250	5	0
111	111	112	1.250	5	0
112	112	113	1.250	5	0
113	113	114	1.250	5	0
114	114	115	1.250	5	0
115	115	116	1.250	5	0
116	116	117	1.250	5	0
117	117	118	1.250	5	0
118	118	119	1.500	5	0
119	102	120	1.285	6	0
120	120	121	1.278	6	0
121	121	122	1.278	6	0
122	122	123	1.278	6	0
123	123	124	1.250	6	0
124	124	125	1.250	6	0
125	125	126	1.250	6	0
126	126	127	1.250	6	0
127	127	128	1.250	6	0
128	128	129	1.250	6	0
129	129	130	1.250	6	0
130	130	131	1.250	6	0
131	131	132	1.278	6	0
132	132	133	1.278	6	0
133	133	134	1.278	6	0
134	134	118	1.285	6	0
135	103	120	0.300	6	0
136	104	121	0.567	6	0
137	105	122	0.833	6	0
138	106	123	1.100	6	0
139	107	124	1.100	6	0
140	108	125	1.100	6	0
141	109	126	1.100	6	0
142	110	127	1.100	6	0
143	111	128	1.100	6	0
144	112	129	1.100	6	0
145	113	130	1.100	6	0
146	114	131	1.100	6	0
147	115	132	0.833	6	0
148	116	133	0.567	6	0
149	117	134	0.300	6	0
150	135	102	2.500	7	0
151	118	136	2.500	7	0
152	120	104	1.285	8	0
153	104	122	1.502	8	0

Beams Cont...

Beam	Node A	Node B	Length (m)	Property	β (degrees)
154	122	106	1.502	8	0
155	106	124	1.665	8	0
156	124	108	1.665	8	0
157	108	126	1.665	8	0
158	126	110	1.665	8	0
159	110	128	1.665	8	0
160	128	112	1.665	8	0
161	112	130	1.665	8	0
162	130	114	1.665	8	0
163	114	132	1.502	8	0
164	132	116	1.502	8	0
165	116	134	1.285	8	0
201	201	202	1.500	9	0
202	202	203	1.250	9	0
203	203	204	1.250	9	0
204	204	205	1.250	9	0
205	205	206	1.250	9	0
206	206	207	1.250	9	0
207	207	208	1.250	9	0
208	208	209	1.250	9	0
209	209	210	1.250	9	0
210	210	211	1.250	9	0
211	211	212	1.250	9	0
212	212	213	1.250	9	0
213	213	214	1.250	9	0
214	214	215	1.250	9	0
215	215	216	1.250	9	0
216	216	217	1.250	9	0
217	217	218	1.250	9	0
218	218	219	1.500	9	0
219	202	220	1.285	10	0
220	220	221	1.278	10	0
221	221	222	1.278	10	0
222	222	223	1.278	10	0
223	223	224	1.250	10	0
224	224	225	1.250	10	0
225	225	226	1.250	10	0
226	226	227	1.250	10	0
227	227	228	1.250	10	0
228	228	229	1.250	10	0
229	229	230	1.250	10	0
230	230	231	1.250	10	0
231	231	232	1.278	10	0
232	232	233	1.278	10	0
233	233	234	1.278	10	0
234	234	218	1.285	10	0
235	203	220	0.300	10	0
236	204	221	0.567	10	0
237	205	222	0.833	10	0
238	206	223	1.100	10	0
239	207	224	1.100	10	0
240	208	225	1.100	10	0
241	209	226	1.100	10	0
242	210	227	1.100	10	0
243	211	228	1.100	10	0
244	212	229	1.100	10	0
245	213	230	1.100	10	0
246	214	231	1.100	10	0
247	215	232	0.833	10	0

KINGDOM OF THAILAND
CHOKCHAI KHATKHAJORN
โชคชัย ขัตขจร
สน. 4522
REGISTERED
PROFESSIONAL ENGINEER

Beams Cont...

Beam	Node A	Node B	Length (m)	Property	β (degrees)
248	216	233	0.567	10	0
249	217	234	0.300	10	0
250	235	202	2.500	11	0
251	218	236	2.500	11	0
252	220	204	1.285	12	0
253	204	222	1.502	12	0
254	222	206	1.502	12	0
255	206	224	1.665	12	0
256	224	208	1.665	12	0
257	208	226	1.665	12	0
258	226	210	1.665	12	0
259	210	228	1.665	12	0
260	228	212	1.665	12	0
261	212	230	1.665	12	0
262	230	214	1.665	12	0
263	214	232	1.502	12	0
264	232	216	1.502	12	0
265	216	234	1.285	12	0
301	301	302	1.500	13	0
302	302	303	5.000	13	0
303	303	304	5.000	13	0
304	304	305	5.000	13	0
305	305	306	5.000	13	0
306	306	307	1.500	13	0
307	302	308	2.500	14	0
308	303	309	2.500	14	0
309	304	310	2.500	14	0
310	305	311	2.500	14	0
311	306	312	2.500	14	0
401	401	402	1.500	15	0
402	402	403	5.000	15	0
403	403	404	5.000	15	0
404	404	405	5.000	15	0
405	405	406	5.000	15	0
406	406	407	1.500	15	0
407	402	408	2.500	16	0
408	403	409	2.500	16	0
409	404	410	2.500	16	0
410	405	411	2.500	16	0
411	406	412	2.500	16	0
501	402	2	4.600	17	0
502	2	102	4.600	17	0
503	102	202	4.600	17	0
504	202	302	4.600	17	0
505	406	18	4.600	17	0
506	18	118	4.600	17	0
507	118	218	4.600	17	0
508	218	306	4.600	17	0
601	303	512	1.150	18	0
602	512	511	1.150	18	0
603	511	510	1.150	18	0
604	510	206	1.150	18	0
605	206	509	1.150	18	0
606	509	508	1.150	18	0
607	508	507	1.150	18	0
608	507	106	1.150	18	0
609	106	506	1.150	18	0
610	506	505	1.150	18	0
611	505	504	1.150	18	0

DHANABHAK ASSET DEVELOPMENT CO., LTD. บริษัท ธนภัทร์ แอสเซ็ท ดีเวลลอปเมนท์ จำกัด

Beams Cont...

Beam	Node A	Node B	Length (m)	Property	β (degrees)
612	504	6	1.150	18	0
613	6	501	1.150	18	0
614	501	502	1.150	18	0
615	502	503	1.150	18	0
616	503	403	1.150	18	0
617	303	524	1.188	19	0
618	524	523	1.181	19	0
619	523	522	1.180	19	0
620	522	223	1.181	19	0
621	223	521	1.150	19	0
622	521	520	1.150	19	0
623	520	519	1.150	19	0
624	519	123	1.150	19	0
625	123	518	1.150	19	0
626	518	517	1.150	19	0
627	517	516	1.150	19	0
628	516	23	1.150	19	0
629	23	513	1.181	19	0
630	513	514	1.180	19	0
631	514	515	1.181	19	0
632	515	403	1.188	19	0
633	510	522	0.833	19	0
634	511	523	0.567	19	0
635	512	524	0.300	19	0
636	507	519	1.100	19	0
637	508	520	1.100	19	0
638	509	521	1.100	19	0
639	504	516	1.100	19	0
640	505	517	1.100	19	0
641	506	518	1.100	19	0
642	501	513	0.833	19	0
643	502	514	0.567	19	0
644	503	515	0.300	19	0
645	524	511	1.188	19	0
646	511	522	1.420	19	0
647	522	206	1.420	19	0
648	206	521	1.591	19	0
649	521	508	1.591	19	0
650	508	519	1.591	19	0
651	519	106	1.591	19	0
652	106	518	1.591	19	0
653	518	505	1.591	19	0
654	505	516	1.591	19	0
655	516	6	1.591	19	0
656	6	513	1.420	19	0
657	513	502	1.420	19	0
658	502	515	1.188	19	0
701	304	612	1.150	20	0
702	612	611	1.150	20	0
703	611	610	1.150	20	0
704	610	210	1.150	20	0
705	210	609	1.150	20	0
706	609	608	1.150	20	0
707	608	607	1.150	20	0
708	607	110	1.150	20	0
709	110	606	1.150	20	0
710	606	605	1.150	20	0
711	605	604	1.150	20	0
712	604	10	1.150	20	0

KINGDOM OF THAILAND
CHOKCHAI KHATKHAJORN
โชคชัย ขัตขจร
สน. 4522
REGISTERED PROFESSIONAL ENGINEER

Beams Cont...

Beam	Node A	Node B	Length (m)	Property	β (degrees)
713	10	601	1.150	20	0
714	601	602	1.150	20	0
715	602	603	1.150	20	0
716	603	404	1.150	20	0
717	304	624	1.188	21	0
718	624	623	1.181	21	0
719	623	622	1.180	21	0
720	622	227	1.181	21	0
721	227	621	1.150	21	0
722	621	620	1.150	21	0
723	620	619	1.150	21	0
724	619	127	1.150	21	0
725	127	618	1.150	21	0
726	618	617	1.150	21	0
727	617	616	1.150	21	0
728	616	27	1.150	21	0
729	27	613	1.181	21	0
730	613	614	1.180	21	0
731	614	615	1.181	21	0
732	615	404	1.188	21	0
733	610	622	0.833	21	0
734	611	623	0.567	21	0
735	612	624	0.300	21	0
736	607	619	1.100	21	0
737	608	620	1.100	21	0
738	609	621	1.100	21	0
739	604	616	1.100	21	0
740	605	617	1.100	21	0
741	606	618	1.100	21	0
742	601	613	0.833	21	0
743	602	614	0.567	21	0
744	603	615	0.300	21	0
745	624	611	1.188	21	0
746	611	622	1.420	21	0
747	622	210	1.420	21	0
748	210	621	1.591	21	0
749	621	608	1.591	21	0
750	608	619	1.591	21	0
751	619	110	1.591	21	0
752	110	618	1.591	21	0
753	618	605	1.591	21	0
754	605	616	1.591	21	0
755	616	10	1.591	21	0
756	10	613	1.420	21	0
757	613	602	1.420	21	0
758	602	615	1.188	21	0
801	305	712	1.150	22	0
802	712	711	1.150	22	0
803	711	710	1.150	22	0
804	710	214	1.150	22	0
805	214	709	1.150	22	0
806	709	708	1.150	22	0
807	708	707	1.150	22	0
808	707	114	1.150	22	0
809	114	706	1.150	22	0
810	706	705	1.150	22	0
811	705	704	1.150	22	0
812	704	14	1.150	22	0
813	14	701	1.150	22	0

Section Properties

Prop	Section	Area (cm^2)	I_{yy} (cm^4)	I_{zz} (cm^4)	J (cm^4)	Material
1	H300X150X6.5	46.780	508.000	7.21E+3	9.954	MATERIAL1
2	H100X100X6	21.590	134.000	378.000	4.076	MATERIAL1
3	H250X250X9	91.430	3.65E+3	10.7E+3	51.468	MATERIAL1
4	H100X100X6	21.590	134.000	378.000	4.076	MATERIAL1
5	H300X150X6.5	46.780	508.000	7.21E+3	9.954	MATERIAL1
6	H100X100X6	21.590	134.000	378.000	4.076	MATERIAL1
7	H250X250X9	91.430	3.65E+3	10.7E+3	51.468	MATERIAL1
8	H100X100X6	21.590	134.000	378.000	4.076	MATERIAL1
9	H300X150X6.5	46.780	508.000	7.21E+3	9.954	MATERIAL1
10	H100X100X6	21.590	134.000	378.000	4.076	MATERIAL1
11	H250X250X9	91.430	3.65E+3	10.7E+3	51.468	MATERIAL1
12	H100X100X6	21.590	134.000	378.000	4.076	MATERIAL1
13	H300X150X6.5	46.780	508.000	7.21E+3	9.954	MATERIAL1
14	H250X250X9	91.430	3.65E+3	10.7E+3	51.468	MATERIAL1
15	H300X150X6.5	46.780	508.000	7.21E+3	9.954	MATERIAL1
16	H250X250X9	91.430	3.65E+3	10.7E+3	51.468	MATERIAL1
17	H300X150X6.5	46.780	508.000	7.21E+3	9.954	MATERIAL1
18	H300X150X6.5	46.780	508.000	7.21E+3	9.954	MATERIAL1
19	H100X100X6	21.590	134.000	378.000	4.076	MATERIAL1
20	H300X150X6.5	46.780	508.000	7.21E+3	9.954	MATERIAL1
21	H100X100X6	21.590	134.000	378.000	4.076	MATERIAL1
22	H300X150X6.5	46.780	508.000	7.21E+3	9.954	MATERIAL1
23	H100X100X6	21.590	134.000	378.000	4.076	MATERIAL1

Materials

Mat	Name	E (kN/mm^2)	ν	Density (kg/m^3)	α (/°C)
1	STEEL	205.000	0.300	7.83E+3	12E -6
2	STAINLESSSTEEL	197.930	0.300	7.83E+3	18E -6
3	ALUMINUM	68.948	0.330	2.71E+3	23E -6
4	MATERIAL1	205.000	0.300	7.85E+3	0.000
5	CONCRETE	21.718	0.170	2.4E+3	10E -6

Supports

Node	X (kN/mm)	Y (kN/mm)	Z (kN/mm)	rX (kN·m/deg)	rY (kN·m/deg)	rZ (kN·m/deg)
35	Fixed	Fixed	Fixed	-	-	-
36	Fixed	Fixed	Fixed	-	-	-
135	Fixed	Fixed	Fixed	-	-	-
136	Fixed	Fixed	Fixed	-	-	-
235	Fixed	Fixed	Fixed	-	-	-
236	Fixed	Fixed	Fixed	-	-	-
308	Fixed	Fixed	Fixed	-	-	-
309	Fixed	Fixed	Fixed	-	-	-
310	Fixed	Fixed	Fixed	-	-	-
311	Fixed	Fixed	Fixed	-	-	-
312	Fixed	Fixed	Fixed	-	-	-
408	Fixed	Fixed	Fixed	-	-	-
409	Fixed	Fixed	Fixed	-	-	-
410	Fixed	Fixed	Fixed	-	-	-
411	Fixed	Fixed	Fixed	-	-	-
412	Fixed	Fixed	Fixed	-	-	-

Beams Cont...

Beam	Node A	Node B	Length (m)	Property	β (degrees)
814	701	702	1.150	22	0
815	702	703	1.150	22	0
816	703	405	1.150	22	0
817	305	724	1.188	23	0
818	724	723	1.181	23	0
819	723	722	1.180	23	0
820	722	231	1.181	23	0
821	231	721	1.150	23	0
822	721	720	1.150	23	0
823	720	719	1.150	23	0
824	719	131	1.150	23	0
825	131	718	1.150	23	0
826	718	717	1.150	23	0
827	717	716	1.150	23	0
828	716	31	1.150	23	0
829	31	713	1.181	23	0
830	713	714	1.180	23	0
831	714	715	1.181	23	0
832	715	405	1.188	23	0
833	710	722	0.833	23	0
834	711	723	0.567	23	0
835	712	724	0.300	23	0
836	707	719	1.100	23	0
837	708	720	1.100	23	0
838	709	721	1.100	23	0
839	704	716	1.100	23	0
840	705	717	1.100	23	0
841	706	718	1.100	23	0
842	701	713	0.833	23	0
843	702	714	0.567	23	0
844	703	715	0.300	23	0
845	724	711	1.188	23	0
846	711	722	1.420	23	0
847	722	214	1.420	23	0
848	214	721	1.591	23	0
849	721	708	1.591	23	0
850	708	719	1.591	23	0
851	719	114	1.591	23	0
852	114	718	1.591	23	0
853	718	705	1.591	23	0
854	705	716	1.591	23	0
855	716	14	1.591	23	0
856	14	713	1.420	23	0
857	713	702	1.420	23	0
858	702	715	1.188	23	0

KINGDOM OF THAILAND
CHOKCHAI KHATKHAJORN
โชคชัย ขัตขจร
สน. 4522
REGISTERED PROFESSIONAL ENGINEER

บริษัท ธนารักษ์พัฒนาสินทรัพย์ จำกัด
DHANARAK ASSET DEVELOPMENT CO.,LTD.

Basic Load Cases

Number	Name
1	(DEAD LOAD - DL)
2	(LIVE LOAD - LL)
3	(WIND LOAD - WL)

Combination Load Cases

Comb.	Combination L/C Name	Primary	Primary L/C Name	Factor
4	(DL+LL)	1	(DEAD LOAD - DL)	1.00
		2	(LIVE LOAD - LL)	1.00
5	0.75(DL+LL+WL)	1	(DEAD LOAD - DL)	0.75
		2	(LIVE LOAD - LL)	0.75
		3	(WIND LOAD - WL)	0.75

Beam Loads : 1 (DEAD LOAD - DL)

Beam	Type	Direction	Fa	Da (m)	Fb	Db	Ecc. (m)
1	UNI kg/m	GY	-230.000	-	-	-	-
2	UNI kg/m	GY	-230.000	-	-	-	-
3	UNI kg/m	GY	-230.000	-	-	-	-
4	UNI kg/m	GY	-230.000	-	-	-	-
5	UNI kg/m	GY	-230.000	-	-	-	-
6	UNI kg/m	GY	-230.000	-	-	-	-
7	UNI kg/m	GY	-230.000	-	-	-	-
8	UNI kg/m	GY	-230.000	-	-	-	-
9	UNI kg/m	GY	-230.000	-	-	-	-
10	UNI kg/m	GY	-230.000	-	-	-	-
11	UNI kg/m	GY	-230.000	-	-	-	-
12	UNI kg/m	GY	-230.000	-	-	-	-
13	UNI kg/m	GY	-230.000	-	-	-	-
14	UNI kg/m	GY	-230.000	-	-	-	-
15	UNI kg/m	GY	-230.000	-	-	-	-
16	UNI kg/m	GY	-230.000	-	-	-	-
17	UNI kg/m	GY	-230.000	-	-	-	-
18	UNI kg/m	GY	-230.000	-	-	-	-
101	UNI kg/m	GY	-230.000	-	-	-	-
102	UNI kg/m	GY	-230.000	-	-	-	-
103	UNI kg/m	GY	-230.000	-	-	-	-
104	UNI kg/m	GY	-230.000	-	-	-	-
105	UNI kg/m	GY	-230.000	-	-	-	-
106	UNI kg/m	GY	-230.000	-	-	-	-
107	UNI kg/m	GY	-230.000	-	-	-	-
108	UNI kg/m	GY	-230.000	-	-	-	-
109	UNI kg/m	GY	-230.000	-	-	-	-
110	UNI kg/m	GY	-230.000	-	-	-	-
111	UNI kg/m	GY	-230.000	-	-	-	-
112	UNI kg/m	GY	-230.000	-	-	-	-
113	UNI kg/m	GY	-230.000	-	-	-	-
114	UNI kg/m	GY	-230.000	-	-	-	-
115	UNI kg/m	GY	-230.000	-	-	-	-
116	UNI kg/m	GY	-230.000	-	-	-	-
117	UNI kg/m	GY	-230.000	-	-	-	-
118	UNI kg/m	GY	-230.000	-	-	-	-
201	UNI kg/m	GY	-230.000	-	-	-	-
202	UNI kg/m	GY	-230.000	-	-	-	-
203	UNI kg/m	GY	-230.000	-	-	-	-
204	UNI kg/m	GY	-230.000	-	-	-	-

KINGDOM OF THAILAND
CHOKCHAI KHATKHAJORN
โชคชัย ขัดขจร
สน. 4522
REGISTERED PROFESSIONAL ENGINEER

Beam Loads : 1 (DEAD LOAD - DL) Cont...

Beam	Type	Direction	Fa	Da (m)	Fb	Db	Ecc. (m)
205	UNI kg/m	GY	-230.000	-	-	-	-
206	UNI kg/m	GY	-230.000	-	-	-	-
207	UNI kg/m	GY	-230.000	-	-	-	-
208	UNI kg/m	GY	-230.000	-	-	-	-
209	UNI kg/m	GY	-230.000	-	-	-	-
210	UNI kg/m	GY	-230.000	-	-	-	-
211	UNI kg/m	GY	-230.000	-	-	-	-
212	UNI kg/m	GY	-230.000	-	-	-	-
213	UNI kg/m	GY	-230.000	-	-	-	-
214	UNI kg/m	GY	-230.000	-	-	-	-
215	UNI kg/m	GY	-230.000	-	-	-	-
216	UNI kg/m	GY	-230.000	-	-	-	-
217	UNI kg/m	GY	-230.000	-	-	-	-
218	UNI kg/m	GY	-230.000	-	-	-	-
301	UNI kg/m	GY	-115.000	-	-	-	-
302	UNI kg/m	GY	-115.000	-	-	-	-
303	UNI kg/m	GY	-115.000	-	-	-	-
304	UNI kg/m	GY	-115.000	-	-	-	-
305	UNI kg/m	GY	-115.000	-	-	-	-
306	UNI kg/m	GY	-115.000	-	-	-	-
401	UNI kg/m	GY	-115.000	-	-	-	-
402	UNI kg/m	GY	-115.000	-	-	-	-
403	UNI kg/m	GY	-115.000	-	-	-	-
404	UNI kg/m	GY	-115.000	-	-	-	-
405	UNI kg/m	GY	-115.000	-	-	-	-
406	UNI kg/m	GY	-115.000	-	-	-	-

Selfweight : 1 (DEAD LOAD - DL)

Direction	Factor
Y	-1.000

Beam Loads : 2 (LIVE LOAD - LL)

Beam	Type	Direction	Fa	Da (m)	Fb	Db	Ecc. (m)
1	UNI kg/m	GY	-230.000	-	-	-	-
2	UNI kg/m	GY	-230.000	-	-	-	-
3	UNI kg/m	GY	-230.000	-	-	-	-
4	UNI kg/m	GY	-230.000	-	-	-	-
5	UNI kg/m	GY	-230.000	-	-	-	-
6	UNI kg/m	GY	-230.000	-	-	-	-
7	UNI kg/m	GY	-230.000	-	-	-	-
8	UNI kg/m	GY	-230.000	-	-	-	-
9	UNI kg/m	GY	-230.000	-	-	-	-
10	UNI kg/m	GY	-230.000	-	-	-	-
11	UNI kg/m	GY	-230.000	-	-	-	-
12	UNI kg/m	GY	-230.000	-	-	-	-
13	UNI kg/m	GY	-230.000	-	-	-	-
14	UNI kg/m	GY	-230.000	-	-	-	-
15	UNI kg/m	GY	-230.000	-	-	-	-
16	UNI kg/m	GY	-230.000	-	-	-	-
17	UNI kg/m	GY	-230.000	-	-	-	-
18	UNI kg/m	GY	-230.000	-	-	-	-
101	UNI kg/m	GY	-230.000	-	-	-	-
102	UNI kg/m	GY	-230.000	-	-	-	-
103	UNI kg/m	GY	-230.000	-	-	-	-

Beam Loads : 2 (LIVE LOAD - LL) Cont...

Beam	Type	Direction	Fa	Da (m)	Fb	Db	Ecc. (m)
104	UNI kg/m	GY	-230.000	-	-	-	-
105	UNI kg/m	GY	-230.000	-	-	-	-
106	UNI kg/m	GY	-230.000	-	-	-	-
107	UNI kg/m	GY	-230.000	-	-	-	-
108	UNI kg/m	GY	-230.000	-	-	-	-
109	UNI kg/m	GY	-230.000	-	-	-	-
110	UNI kg/m	GY	-230.000	-	-	-	-
111	UNI kg/m	GY	-230.000	-	-	-	-
112	UNI kg/m	GY	-230.000	-	-	-	-
113	UNI kg/m	GY	-230.000	-	-	-	-
114	UNI kg/m	GY	-230.000	-	-	-	-
115	UNI kg/m	GY	-230.000	-	-	-	-
116	UNI kg/m	GY	-230.000	-	-	-	-
117	UNI kg/m	GY	-230.000	-	-	-	-
118	UNI kg/m	GY	-230.000	-	-	-	-
201	UNI kg/m	GY	-230.000	-	-	-	-
202	UNI kg/m	GY	-230.000	-	-	-	-
203	UNI kg/m	GY	-230.000	-	-	-	-
204	UNI kg/m	GY	-230.000	-	-	-	-
205	UNI kg/m	GY	-230.000	-	-	-	-
206	UNI kg/m	GY	-230.000	-	-	-	-
207	UNI kg/m	GY	-230.000	-	-	-	-
208	UNI kg/m	GY	-230.000	-	-	-	-
209	UNI kg/m	GY	-230.000	-	-	-	-
210	UNI kg/m	GY	-230.000	-	-	-	-
211	UNI kg/m	GY	-230.000	-	-	-	-
212	UNI kg/m	GY	-230.000	-	-	-	-
213	UNI kg/m	GY	-230.000	-	-	-	-
214	UNI kg/m	GY	-230.000	-	-	-	-
215	UNI kg/m	GY	-230.000	-	-	-	-
216	UNI kg/m	GY	-230.000	-	-	-	-
217	UNI kg/m	GY	-230.000	-	-	-	-
218	UNI kg/m	GY	-230.000	-	-	-	-
301	UNI kg/m	GY	-115.000	-	-	-	-
302	UNI kg/m	GY	-115.000	-	-	-	-
303	UNI kg/m	GY	-115.000	-	-	-	-
304	UNI kg/m	GY	-115.000	-	-	-	-
305	UNI kg/m	GY	-115.000	-	-	-	-
306	UNI kg/m	GY	-115.000	-	-	-	-
401	UNI kg/m	GY	-115.000	-	-	-	-
402	UNI kg/m	GY	-115.000	-	-	-	-
403	UNI kg/m	GY	-115.000	-	-	-	-
404	UNI kg/m	GY	-115.000	-	-	-	-
405	UNI kg/m	GY	-115.000	-	-	-	-
406	UNI kg/m	GY	-115.000	-	-	-	-

KINGDOM OF THAILAND
CHOKCHAI KHATKHAJORN
โชคชัย ขัตขจร
สน. 4522
REGISTERED PROFESSIONAL ENGINEER

Beam Loads : 3 (WIND LOAD - WL)

Beam	Type	Direction	Fa	Da (m)	Fb	Db	Ecc. (m)
1	UNI kg/m	GY	736.000	-	-	-	-
2	UNI kg/m	GY	736.000	-	-	-	-
3	UNI kg/m	GY	736.000	-	-	-	-
4	UNI kg/m	GY	736.000	-	-	-	-
5	UNI kg/m	GY	736.000	-	-	-	-
6	UNI kg/m	GY	736.000	-	-	-	-
7	UNI kg/m	GY	736.000	-	-	-	-
8	UNI kg/m	GY	736.000	-	-	-	-
9	UNI kg/m	GY	736.000	-	-	-	-
10	UNI kg/m	GY	736.000	-	-	-	-
11	UNI kg/m	GY	736.000	-	-	-	-
12	UNI kg/m	GY	736.000	-	-	-	-
13	UNI kg/m	GY	736.000	-	-	-	-
14	UNI kg/m	GY	736.000	-	-	-	-
15	UNI kg/m	GY	736.000	-	-	-	-
16	UNI kg/m	GY	736.000	-	-	-	-
17	UNI kg/m	GY	736.000	-	-	-	-
18	UNI kg/m	GY	736.000	-	-	-	-
101	UNI kg/m	GY	736.000	-	-	-	-
102	UNI kg/m	GY	736.000	-	-	-	-
103	UNI kg/m	GY	736.000	-	-	-	-
104	UNI kg/m	GY	736.000	-	-	-	-
105	UNI kg/m	GY	736.000	-	-	-	-
106	UNI kg/m	GY	736.000	-	-	-	-
107	UNI kg/m	GY	736.000	-	-	-	-
108	UNI kg/m	GY	736.000	-	-	-	-
109	UNI kg/m	GY	736.000	-	-	-	-
110	UNI kg/m	GY	736.000	-	-	-	-
111	UNI kg/m	GY	736.000	-	-	-	-
112	UNI kg/m	GY	736.000	-	-	-	-
113	UNI kg/m	GY	736.000	-	-	-	-
114	UNI kg/m	GY	736.000	-	-	-	-
115	UNI kg/m	GY	736.000	-	-	-	-
116	UNI kg/m	GY	736.000	-	-	-	-
117	UNI kg/m	GY	736.000	-	-	-	-
118	UNI kg/m	GY	736.000	-	-	-	-
201	UNI kg/m	GY	736.000	-	-	-	-
202	UNI kg/m	GY	736.000	-	-	-	-
203	UNI kg/m	GY	736.000	-	-	-	-
204	UNI kg/m	GY	736.000	-	-	-	-
205	UNI kg/m	GY	736.000	-	-	-	-
206	UNI kg/m	GY	736.000	-	-	-	-
207	UNI kg/m	GY	736.000	-	-	-	-
208	UNI kg/m	GY	736.000	-	-	-	-
209	UNI kg/m	GY	736.000	-	-	-	-
210	UNI kg/m	GY	736.000	-	-	-	-
211	UNI kg/m	GY	736.000	-	-	-	-
212	UNI kg/m	GY	736.000	-	-	-	-
213	UNI kg/m	GY	736.000	-	-	-	-
214	UNI kg/m	GY	736.000	-	-	-	-
215	UNI kg/m	GY	736.000	-	-	-	-
216	UNI kg/m	GY	736.000	-	-	-	-
217	UNI kg/m	GY	736.000	-	-	-	-
218	UNI kg/m	GY	736.000	-	-	-	-
301	UNI kg/m	GY	368.000	-	-	-	-
302	UNI kg/m	GY	368.000	-	-	-	-
303	UNI kg/m	GY	368.000	-	-	-	-
304	UNI kg/m	GY	368.000	-	-	-	-
305	UNI kg/m	GY	368.000	-	-	-	-